BRASCH
ENVIRONMENTAL TECHNOLOGIES

GDCP-Touch

Installation / Operation Manual

Brasch Environmental Technologies, LLC
140 Long Road, Suite 101
Chesterfield, Missouri 63005
314-291-0440
www.braschenvtech.com

This product comes with free installation and startup training. See back cover for details.

Table of Contents

Introduction

General Description

The Brasch Environmental Technologies GDCP-Touch Gas Detector Control Panel is designed to function as a complete ventilation control system. These systems can be as simple as a panel and one transmitter controlling one ventilation fan, or as complex as a panel with 128 sensors controlling 32 zones worth of ventilation equipment.

The control panel itself consists of a touchscreen display, a relay control board, and digital control circuitry. The panel monitors the signal from the transmitters, compares the signal to preset values, and controls relay contacts based upon the comparison. These relay contacts then provide signals that control ventilation components such as exhaust fans, louvers, and dampers. The touchscreen provides a visual indication of the system's operational condition along with an intuitive interface for configuring the entire system. A linear proportional output is also included for communication with a building management system (BMS), direct digital controls system (DDCS), or variable-frequency drive (VFD).

The sensors used in the remote transmitters operate on the electrochemical principle and are able to detect carbon monoxide or nitrogen dioxide. A current is produced when the target gas reacts chemically with an electrode inside the sensor. This small current is converted to an analog voltage, amplified, and converted to a digital signal. This signal is proportional to the gas concentration present at the sensor and is shown on the display. After comparing the digital signal to preset values, the panel updates the display and relays.

The GDCP-Touch housing has a NEMA 4X rating and is supplied with knockouts so that the control panel can mount directly to a standard four inch conduit box. A hinged cover secured by two screws makes it easy to gain access to the touchscreen for system configuration. A secondary, interior hinge affords access to the relay board, allowing power, communication, and relay connections to be made.

The GDCP-Touch can also accept additional relay boards in the form of GDCP-ExpansionPacks. These provide four more relays for added control along with another analog output and a signal repeater to extend the range and sensor capacity. GDCP-PowerPacks may be added to convert AC line voltage to the low voltage required to power the control panel, transmitters, and relay boards.

Features and Benefits

- Limitless Possibilities
  - Fully Configurable Zones, Relays, Setpoints, Delays, and Outputs
  - Scalable System Size via Relay Expansion Packs
- Increased Control
  - On-Demand Ventilation Control by Gas Concentration, Timer Schedule, or User Input
  - 7” Full-Color LCD Touch Screen
- Maximum Detection
  - Monitors up to 128 CO and/or NO_2 Sensors
  - Each Sensor Covers up to 9,000 sq. ft.
- Enhanced Durability
  - NEMA 4X Water and Dust Resistance
- Intelligent Connectivity
  - BACnet IP and Modbus RTU Communication for BMS Interfacing
- Simplified Installation
  - Customized Factory Programming and Configuration for Every Job

Technical Specifications

Product Specifications

Input Power	24 VAC, 50/60 Hz, 0.75 A Optional: 120 VAC, 50/60 Hz, 0.3 A via GDCP-PowerPack
Installation Category	II (local level, over-voltage transients less than 500V)
Storage Temperature	-50°C to 120°C (-58°F to 248°F)
Operating Temperature	-20°C to 70°C (-4°F to 158°F)
Humidity	10% to 90% (non-condensing)
Ventilation Control Relays	125 VAC, 50/60 Hz, 5 A resistive, 250 VA inductive
Relay Capacity	4 internal, up to 32 total relays via GDCP-ExpansionPacks
Sensor Capacity	Up to 30 remote sensors Optional: Up to 128 remote sensors via GDCP-ExpansionPacks
Zone Capacity	Up to 4 zones Optional: Up to 32 zones via GDCP-ExpansionPacks
Internal Alarm	70 dB @ 10 cm, 2.9 kHz piezoelectric element
Display	7.0” LCD, 1024 x 600, 5-point capacitive touch
Analog Outputs	User-selectable 4-20 mA, 0.2-1 VDC, 1-5 VDC, or 2-10 VDC
Digital Outputs	BACnet IP, Modbus RTU
Alert Levels	4 levels, fully adjustable
Delay Times	0 to 599 minutes, separate settings for entrance and exit
Dimensions	8.72” W x 10.50” H x 2.90” D (22 cm W x 27 cm H x 7 cm D)
Weight	5.0 lbs (2.27 kg)
Housing	Gray, NEMA 4X, polycarbonate plastic
Compliance	ANSI/ISA 92.00.01-2010 (R2015) EN 50270 FCC Part 15 Subpart B RoHS

Target Gas Specifications

Remote transmitters for this control panel are available for monitoring carbon monoxide and/or nitrogen dioxide as target gases. Regulatory agencies have determined the threshold concentrations at which the gases become dangerous. Brasch Environmental Technologies, LLC has designed their transmitters so that the measurement ranges for each target gas meet the agencies' requirements. Each target gas, for which Brasch currently produces a transmitter, is listed below along with the relevant concentration specifications.

Carbon Monoxide

Full Scale Span:	200 PPM
Resolution:	1 PPM
Minimum Accuracy*:	± 10% or 6 PPM
Relay Setpoints	0-200 PPM (in increments of 1.0 PPM)
Expected Lifespan	10 years
Recommended Recalibration Time	2 years

Nitrogen Dioxide

Full Scale Span:	10 PPM
Resolution:	0.1 PPM
Minimum Accuracy*:	± 15% or 0.8 PPM
Relay Setpoints	0-10 PPM (in increments of 0.1 PPM)
Expected Lifespan	10 years
Recommended Recalibration Time	2 years

*Allowable tolerance for accuracy and repeatability criteria as defined in Annex A, Item 2 of ANSI/ISA 92.00.01-2010 (R2015)

Operation Safety Notice

Certain procedures and operations detailed in this manual require that specific precautions be taken prior to beginning the procedure or operation. When precautions are required, a notice will be printed in an appropriate location in the manual. The user is urged to read and understand all such notices.

Types of Notices

Three types of notices may be used in this manual to describe the severity of the situation encountered.

WARNING:	This notice indicates that conditions exist that could cause personal injury or loss of life.
CAUTION**:**	Conditions exist that could cause damage to the equipment or other property.
Note:	Special consideration should be given to the procedure or operation, otherwise an unexpected operational result could occur.

Quick Start Guide

Please read this entire manual before attempting to install and operate this control panel. This guide is only intended to provide the basic steps necessary for installation and operation. Each step will reference the portion of the manual where more complete information can be obtained.

Step 1 – Mounting

Determine the location for mounting your panel and transmitters. The locations may be indicated on the architectural drawing. Also, the owner or designer of the facility may be consulted. Mounting guidelines can be found on page 14 of this manual.

Step 2 – Input Wiring

WARNING

This control panel may require the use of voltage levels high enough to cause fatal injuries. Proper procedures must be followed any time work is performed on this unit.

Only qualified personnel should attempt to install, maintain, or service this equipment.

Provide a dedicated circuit at the required 24 VAC operating voltage at each panel mounting location. Follow all national and local wiring codes. A conductor connected to earth ground should also be provided. The circuit must include a disconnect switch located within easy reach of the panel.

Ensure that the step-down transformer provides 24 VAC and has the necessary volt-amp rating to power each component in the system. Each control panel requires 18 VA, each transmitter requires 2.4 VA, and each expansion pack requires 9.6 VA.

CAUTION

Operating these devices with the incorrect voltage and power requirements can cause internal electrical components to overheat and fail. Operation with the wrong power requirement will void the manufacturer's warranty and the installer will be responsible for any damage that occurs.

Contact Brasch Environmental Technologies, LLC before connecting power to the control panel or transmitters if you are unsure of the correct power requirement.

This device uses an EMI power line filter to reduce unwanted noise. Connect the incoming power conductors to the line side of the filter. The load side of the filter is already wired to the input power terminals on the relay board. Be sure to ground the control panel at the center terminal of the line filter.

Refer to page 16 for further information.

Step 3 – Remote Transmitter Wiring

The control panel does not supply power to the remote transmitters. However, power may be daisy chained through the control panel to the transmitters. Use a two-conductor cable with color-coded conductors of at least 18 AWG to connect the power. Use a shielded, twisted pair cable with color-coded conductors of at least 24 AWG to connect communication. See the table below for recommended wire gauges. A single four-conductor cable may be used but will reduce the maximum distance the system can cover. See figure 10 on page 54 for details. If possible, choose cables with color-coded conductors that follow the suggested color scheme listed on the drawings. While a star wiring configuration may be achievable, it is not recommended. Use a straight daisy chain configuration for best results.

Power			Communication		
AWG	**Feet**	**Meters**	**AWG**	**Feet**	**Meters**
18	250	80	24	200	60
16	400	125	22	350	100
14	650	200	20	500	150
12	1000	320	18	850	215

CAUTION

It is very important that the power and signal connections between each transmitter and between the transmitters and the control panel be correct. If the connections are wired incorrectly, damage to both the transmitters and the control panel will occur.

Use a cable with color-coded conductors and make sure that the same conductor connects to the same terminal on each transmitter and the control panel.

Do not apply power to the transmitter or control panel unless you are sure that the connections are correct.

Single transmitters will be shipped with four color-coded wires exiting the top of the housing through a conduit fitting. Dual transmitters will be shipped with an extra twisted pair to

maintain a true daisy chain. If you have chosen color-coded conductors that match the wire colors, connect the cable conductors to the wires of the same color. If your cable conductors do not match the wire colors, assign a cable conductor color to each wire and make a list of this assignment. Follow this color assignment when connecting any other transmitters in the system. All transmitters share the same conductors back to the panel. Therefore, a four-conductor cable can be connected from transmitter to transmitter, or from transmitter to panel, as the situation dictates. Follow the wiring diagrams on page 21 through 23 of the manual to determine the proper connections at the panel.

Step 4 – Relay Wiring

The relay board inside the control panel has four relays with connections for both normally open (NO) and normally closed (NC) operation. These connection points are labeled on the silkscreen next to the terminal blocks as well as in the diagram on page 54. The relay state is labeled for the physical state of the relay when the control panel is not powered. In the default configuration, all relays will operate independently of one another. To use multiple-speed fans, you will need to assign different relay levels in the settings and invert the wiring connections to avoid damaging ventilation equipment.

Do not exceed the specified voltage and power limits of the relays (see page 7). Most installations require motor starters or larger relays to provide the necessary power requirements for the ventilation components.

For more information concerning ventilation system operation, read page 18 of this manual.

Step 5 – External Alarms

Determine if the installation requires an external alarm. If so, provide the proper wiring and connect the wires to the required voltage source. Any relay may be used to trigger an external alarm. To synchronize the internal control panel alarm with external alarms, make sure the setpoints and delay times are the same in both the *Zone Settings Screen* and *Relay Settings Screen*.

Refer to page 19 for more information concerning the alarm feature.

Step 6 – Applying Power

Once you are sure that the wiring connections are correct, apply power to the control panel circuit. When power is first applied to the transmitters, they will begin a 150 second warm-up period. During this time, the control panel will display “--” in place of gas concentration values on the *Zone Screen* and *Relay Screen*. Once the warm-up has finished, the gas concentration values will appear.

See page 19 for more information concerning the initial startup.

Step 7 – Testing the System

The manual overrides on this control panel can be used to open and close the relays to verify that ventilation and warning equipment is connected properly. This feature can be accessed from the individual *Relay Settings* screens.

Page 20 contains a more complete procedure for testing the system.

At this point, the control panel and transmitters are now ready to monitor for the presence of the target gas(es) and control the ventilation system to efficiently remove the gas from the protected area.

Installation

Mounting the Control Panel

The control panel is the central hub for monitoring and controlling all of the transmitters. However, it does not necessarily need to be mounted in a centralized location. It should be mounted indoors in a dry location where authorized users will have easy access and the display can be easily read. Avoid placing the control panel in areas that might need to be evacuated during a high-gas alarm condition.

The control panel is attached in the mounting position in one of two ways.

- Attach the housing to a four inch conduit box using standard ½" conduit fittings. If you use this method, make sure that the four inch box is securely attached with screws to a solid support base. Firmly tighten the threaded nuts on the conduit fittings so they will not loosen over time.
- Attach the housing to a solid support base using screws through the holes in the mounting feet.

  Find a flat area at least 8 inches wide by 11 inches tall and place the back of the housing flat against it. Using a pencil or other slender marking tool, mark the location of the four mounting holes using the housing as a template. Start the screws without the housing in place to avoid any possibility of damage to the housing. Remove the screws, place the housing in position, and install the mounting screws. Do not over-tighten the screws as this may crack the plastic housing.

Mounting the Transmitters

The ability of the transmitters to sense the target gas and efficiently control the ventilation system depends greatly upon proper selection of the mounting location. A transmitter monitors the area around it by sampling the air that passes by the sensor. Since the sensor is mounted inside a housing, air must diffuse through the intake vents and pass by the sensor on its way out the exhaust vents. Therefore, the transmitter should be positioned where it can sample air that contains a target gas concentration representative of the average value in that area.

When determining the mounting location, give special consideration to the following guidelines.

- Use one sensor per target gas for each area to be covered.
- Always prioritize locations with the highest occupation density.

- Do not locate any transmitter further than 4000 feet from a control panel or expansion pack.
- The types of gases each unit is designed to monitor have densities approximately equal to that of air. For maximum safety, mount the unit at the average breathing height – approximately 5 to 7 feet from the floor.
- Avoid mounting locations that would not be representative of the average gas value in that area. These include but are not limited to locations near doorways, fans, ventilation inlets and outlets, and areas with air velocities in excess of 3.3 ft/s (1 m/s).
- Avoid locations that would allow direct contact with water. Mounting the unit near outside garage doors may allow rain to hit the unit when the door is open.
- Avoid locations that are directly in the outlet air vents of heaters or air conditioners.
- Avoid mounting locations with normal ambient temperatures below -4°F (-20°C) or above 122°F (50°C).
- Do not allow exhaust from engines to flow directly on the unit. Each unit is designed to sense gas concentrations that are 300 to 1000 times less concentrated than the gas levels found in engine exhaust. Also, engine exhaust contains high levels of other components. These components can shorten the useful life of the sensor if they contact the sensor before being diluted by the room air volume.
- Avoid mounting locations where the unit may be hit by passing vehicles. If the unit must be mounted in these locations, provide a shielding cage around the unit for protection.
- Do not restrict the air flow to the unit housing.
- Do not mount the unit in a corner.
- Do not mount the unit near containers of chemicals such as gasoline, kerosene, alcohol, or other cleaning fluids. High level concentrations of these chemicals may be mistaken as the target gas by the sensor and cause false readings. Also, some welding gases may cause false readings.

The transmitter is attached in the mounting position in one of two ways.

- Attach the housing to conduit using appropriate conduit fittings. If you use this method, make sure that the conduit is securely attached to a solid support. Firmly tighten the threaded nuts on the conduit fittings inside the transmitter housing so they will not loosen over time.
- Attach the housing to a four inch square conduit box using the ½ inch fitting provided with the transmitter. Make sure that the conduit box is firmly fastened to the mounting

surface with screws. Securely tighten the fitting nut on the inside of the conduit box so it will not loosen over time.

Connecting the Power Supply

WARNING

This detector may require the use of voltage levels high enough to cause fatal injuries. Proper procedures must be followed any time work is performed on this unit.

Only qualified personnel should attempt to install, maintain, or service this equipment.

While this control panel does not require much power to operate, it is usually located near machines that do consume large amounts of power. When these large machines operate, they cause large voltage spikes to appear on the AC wiring. These spikes can interfere with the proper operation of the control panel or transmitters. The easiest way to avoid much of this interference is by providing power to the system through a dedicated circuit from the service panel.

Note

Do not operate the detector on the same AC circuit as the ventilation components. Doing this will almost always cause improper operation.

Provide a dedicated circuit at 24 VAC at each panel and transmitter mounting location. Follow all national and local wiring codes. A conductor connected to earth ground should also be provided. The circuit must include a disconnect switch located within easy reach of the panel.

Be sure that the step-down transformer provides 24 VAC and has the necessary volt-amp rating to power each component in the system. Each control panel requires 18 VA, each transmitter requires 2.4 VA, and each expansion pack requires 9.6 VA.

CAUTION

Operating these devices with the incorrect voltage and power requirement can cause internal electrical components to overheat and fail. Operation with the wrong power requirements will void the manufacturer's warranty, and the installer will be responsible for any damage that occurs.

Contact Brasch Environmental Technologies, LLC before connecting power to the control panel and transmitters if you are unsure of the correct power requirement.

This device uses an EMI power line filter to reduce unwanted noise. Connect the incoming power conductors to the line side of the filter. The load side of the filter is already wired to the input power terminals on the relay board. Be sure to ground the control panel at the center terminal of the line filter.

If minor maintenance work needs to be performed on the control panel, there is a power switch for the panel to the left of the incoming power wires on the printed circuit board. By default, this switch is in the "OFF" position.

Connecting the Remote Transmitters

The control panel does not supply power to the remote transmitters. However, power may be daisy chained through the control panel to the transmitters. Use a two-conductor cable with color-coded conductors of at least 18 AWG to connect the power. Use a shielded, twisted pair cable with color-coded conductors of at least 24 AWG to connect communication. See the table below for recommended wire gauges. A single four-conductor cable may be used but will reduce the maximum distance the system can cover. See figure 10 on page 54 and figures 16 and 17 on page 58 for details. If possible, choose cables with color-coded conductors that follow the suggested color scheme listed on the drawings. While a star wiring configuration may be achievable, it is not recommended. Use a straight daisy chain configuration for best results.

Power			**Communication**		
AWG	**Feet**	**Meters**	**AWG**	**Feet**	**Meters**
18	250	80	24	200	60
16	400	125	22	350	100
14	650	200	20	500	150
12	1000	320	18	850	215

CAUTION

It is very important that the power and signal connections between each transmitter and between the transmitters and the control panel be correct. If the connections are wired incorrectly, damage to both the transmitters and the control panel will occur.

Use a cable with color-coded conductors and make sure that the same conductor connects to the same terminal on each transmitter and the control panel.

Do not apply power to the transmitter or control panel unless you are sure that the connections are correct.

Single transmitters will be shipped with four color-coded wires exiting the top of the housing through a conduit fitting. Dual transmitters will be shipped with an extra twisted pair to maintain a true daisy chain. If you have chosen color-coded conductors that match the wire colors, connect the cable conductors to the wires of the same color. If your cable conductors do not match the wire colors, assign a cable conductor color to each wire and make a list of this assignment. Follow this color assignment when connecting any other transmitters in the system. All transmitters share the same conductors back to the panel. Therefore, a four-conductor cable can be connected from transmitter to transmitter, or from transmitter to panel, as the situation dictates. Follow the wiring diagrams on page 21 and 22 to determine the proper connections at the panel.

Connecting the Ventilation System

As an energy saving device, the main function of this control panel is to operate the ventilation system only when necessary. To accomplish this, the panel is equipped with four control relays for both normally open (NO) and normally closed (NC) operation. The contacts of these relays can control various ventilation system configurations. Figures 1 and 2 on page 21 give examples of the wiring for some common systems. Coil control signals on relays for damper and make-up air units can also be connected across the panel's relay contacts so that these components actuate simultaneously with the exhaust fans. However, do not exceed the maximum ratings of the relays (see page 7).

Please give special attention to the note on each wiring diagram. Relay levels must be properly configured in the *Settings Menu* before power is applied or the ventilation system will not function correctly. All relays are factory set at Level 1 unless specified otherwise on the order form. Therefore, unless a multiple-speed motor starter is used, or ventilation equipment is to be operated in stages, the ventilation wiring can be connected without adjusting this setting.

To change the relay level, navigate to *Settings* > *Relay Settings* > *Relay #*. Then scroll to the bottom and tap on “Relay Level”. Follow the instructions on screen to determine the correct setting.

Connecting the External Alarm

This control panel comes standard with an internally mounted alarm. If the target gas concentration exceeds the zone alarm setpoint and remains there for the duration of the on-delay, this alarm will sound. Any relay contacts can be used to connect an external alarm. To synchronize the internal control panel alarm with external alarms, make sure the setpoints and delay times are the same in both the *Zone Settings* and *Relay Settings* screens.

Figures 1 and 2 on page 21 show typical alarm wiring.

Connecting the Voltage or Current Proportional Output

The GDCP-Touch and GDCP-ExpansionPack include circuits that provide either a current loop or voltage proportional output. Each output produces a linear response over the full scale range of the average of all connected sensors in a zone. Every zone configured on the control panel can accommodate one of these outputs. A detailed description of these outputs can be found starting on page 40.

Applying Power For the First Time

Once all the wiring connections are complete, the system is ready for power to be applied. The first 2.5 minutes after the power is turned on serves as a warm-up period. During this time, the control panel will display “--” in place of gas concentration values on the *Zone Screen* and *Relay Screen*. All Level 1 relays will also be active. Once the warm-up has finished, the gas concentration values will appear. In most cases, the gas concentration will be “0” or “0.0”. However, if the target gas is present in the monitored area, the display will indicate the actual concentration. All menus and features of the control panel are accessible without waiting for the warm-up timer to expire.

Performing a System Test

The manual overrides on this control panel can be used to open and close the relays to verify that ventilation and warning equipment is connected properly. This feature can be accessed by navigating to *Settings* > *Relay Settings*> *Relay #*. Selecting “On” or “Off” will activate and deactivate the relays accordingly. Be sure to disable any override by selecting “None” when you have completed testing a relay. Repeat this process for all relays with connected ventilation equipment. Note that this process does not test the sensors’ response to the target gas. Page 42 gives tips and procedures for testing the sensors’ response.

Typical Installation Diagrams

Full resolution diagrams available at https://www.arcat.com/arcatcos/cos52/arc52580.html.

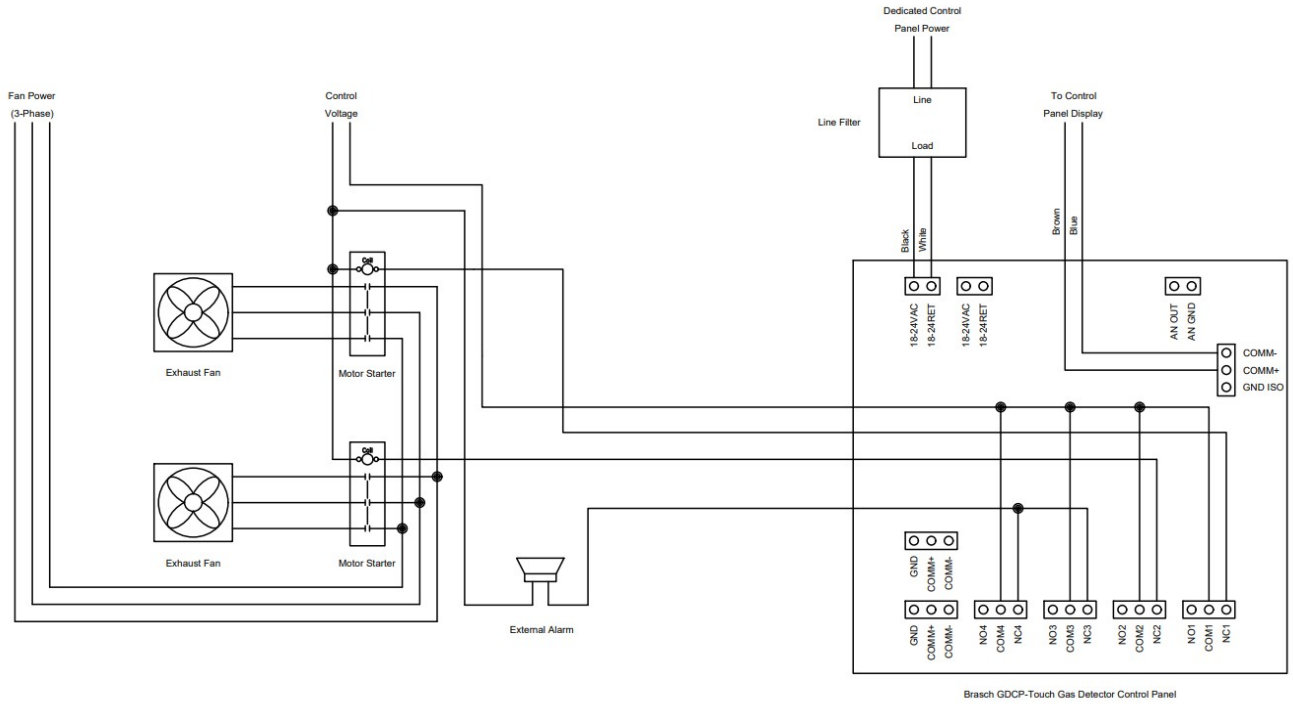

Figure 1: Wiring – Two Fan Ventilation System with Common Alarm

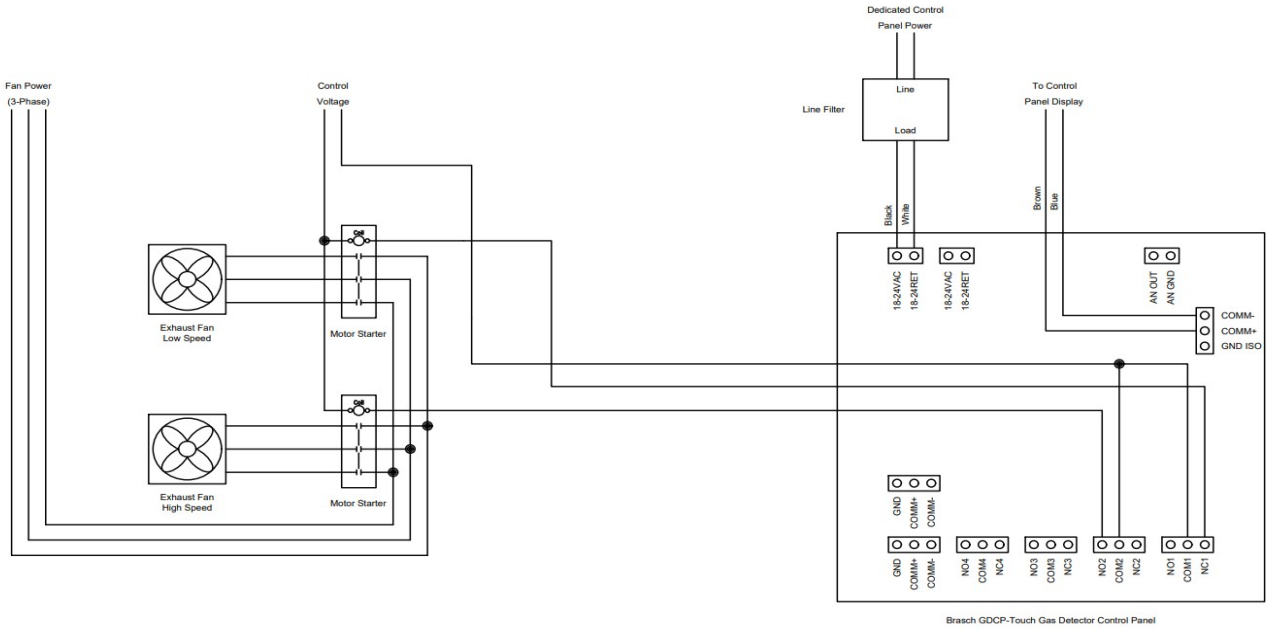

Figure 2: Wiring – Two-Speed Fan Ventilation System

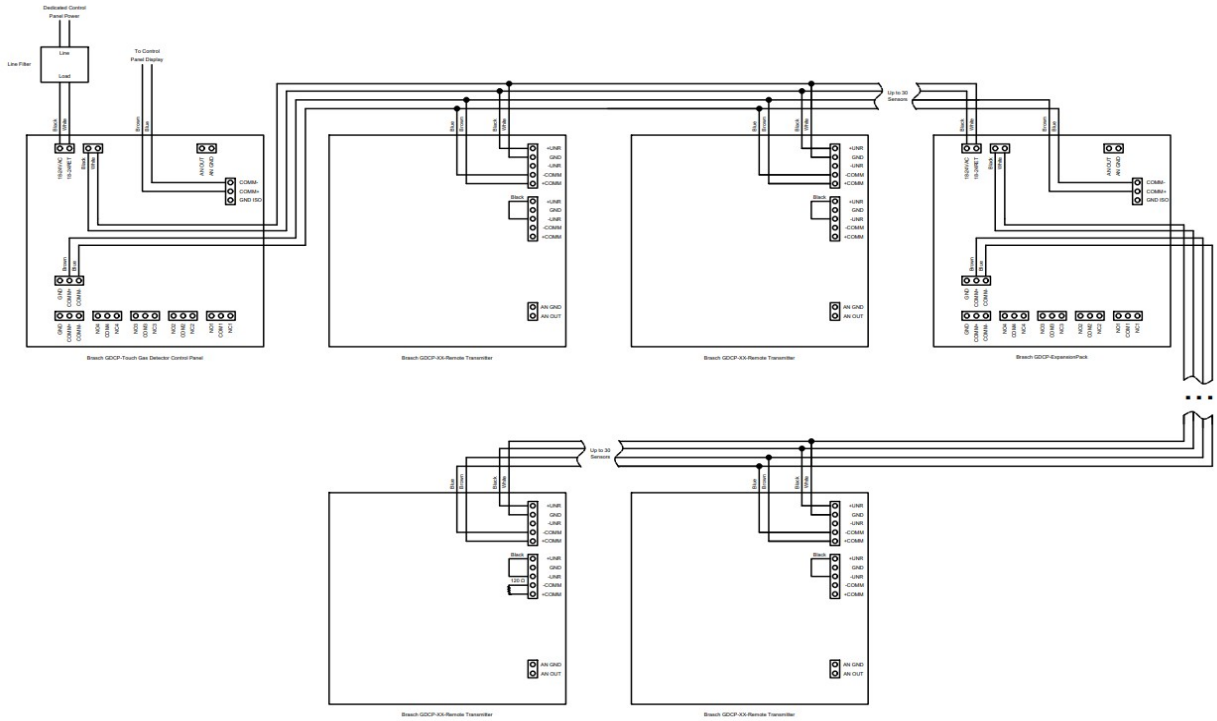

Figure 3: Wiring – Transmitter Connection – Daisy Chain (Dedicated Power)

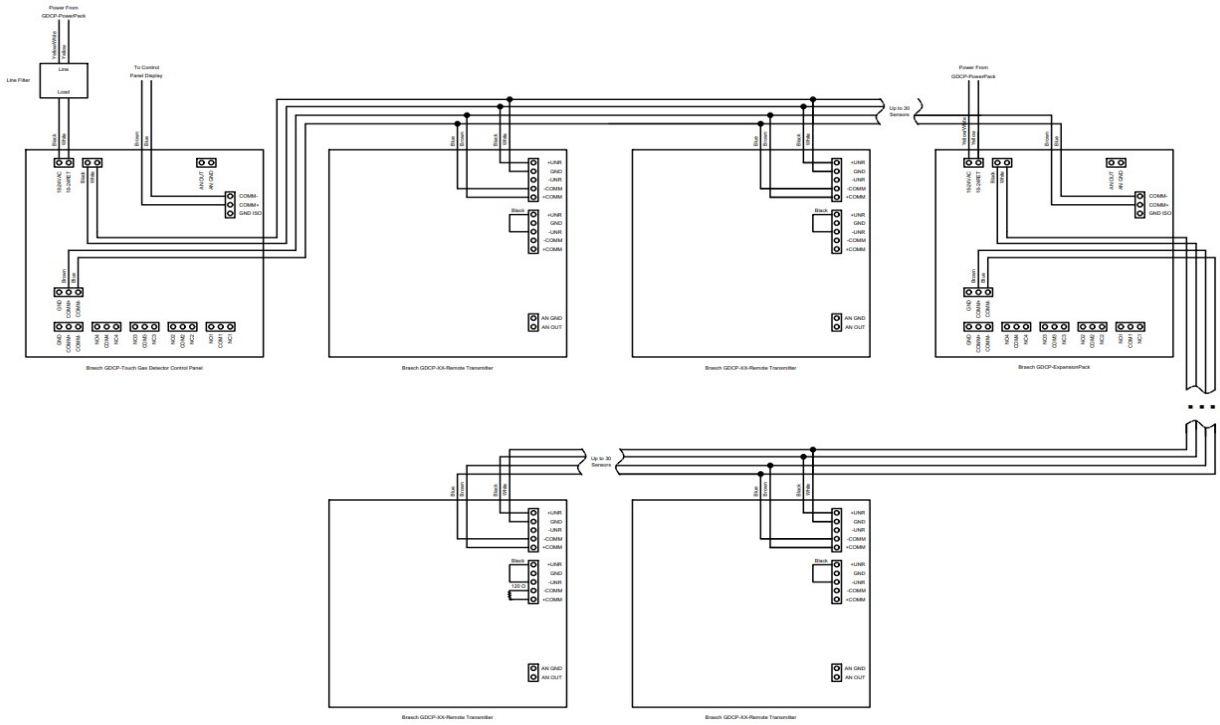

Figure 4: Wiring – Transmitter Connection – Daisy Chain (GDCP-PowerPack)

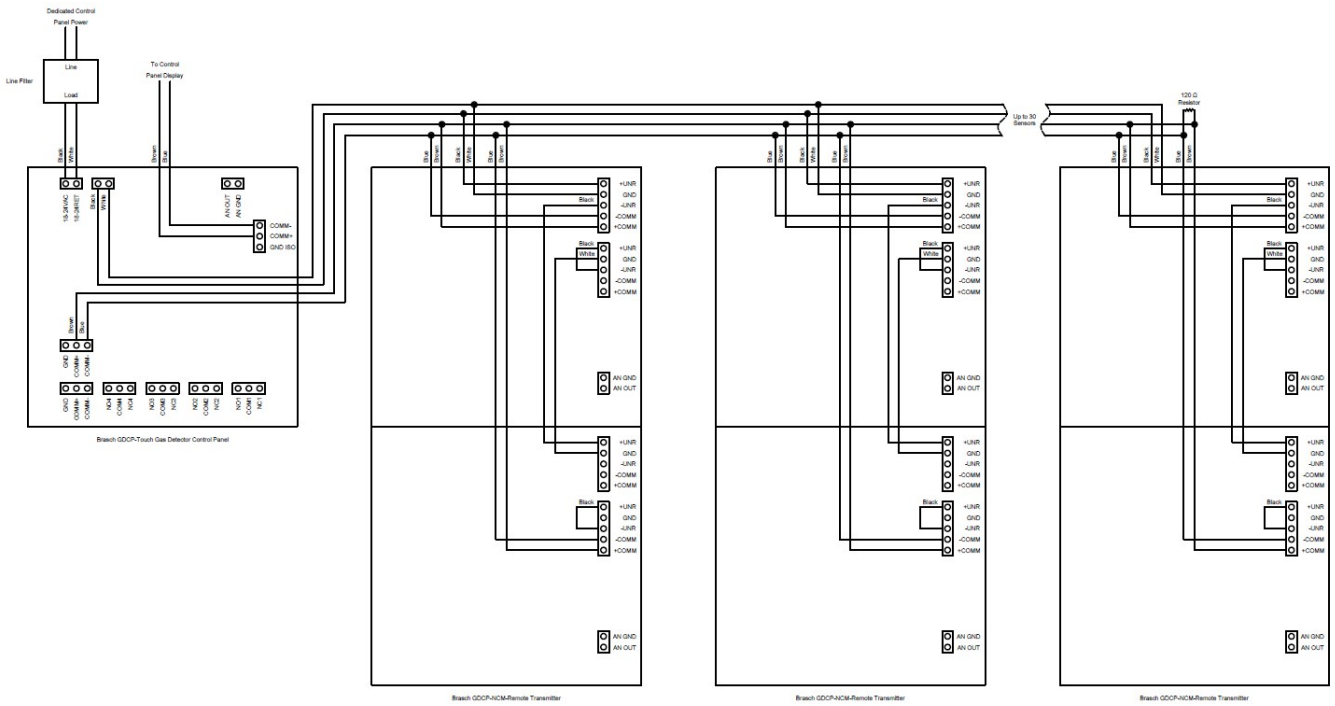

Figure 5: Wiring – Transmitter Connection – Dual Transmitter

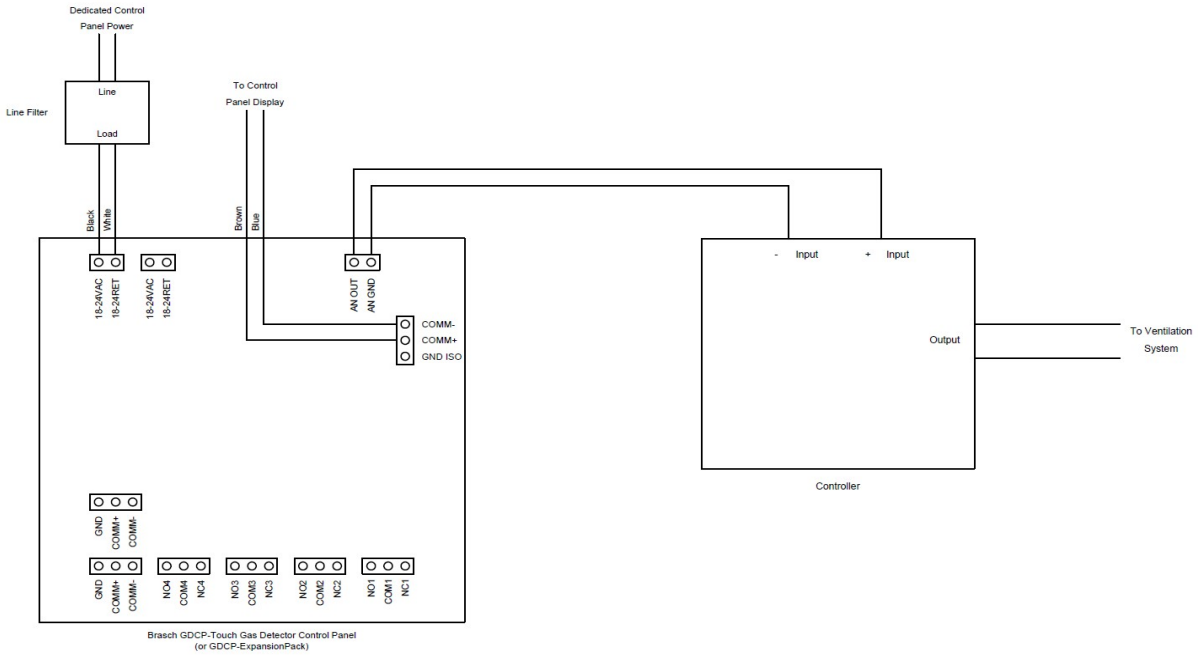

Figure 6: Wiring – Analog Output

Operation

How the Transmitter Senses the Target Gas

Ambient air surrounding the transmitter housing diffuses inside the housing where it comes into contact with the sensor. Although the transmitter's circuitry dissipates very little power, a small amount of heat is produced inside the housing. This heat causes air to rise up through the bottom vents, past the sensor, and out the upper vent. Any target gas present in this air causes a response from the sensor. If the transmitter is located properly, the sensor will respond to the average amount of the target gas present in the area. For help in properly locating the transmitter, please read the mounting guidelines on page 14. This transmitter monitors the actual concentration of the target gas exposed to the sensor. This actual value may be different than the time-weighted-average values displayed by many personal gas monitors. Please take this difference into account when comparing the response of the two units.

How the Panel Controls the Ventilation Equipment

The GDCP-Touch allows the user to configure a ventilation control system in a variety of ways to meet almost any specification. Below are the components used to build these configurations. If requested at the time of order, Brasch will customize the configuration to match a job requirement so that the only field work needed is installation.

Sensors

Every remote transmitter attached to the control panel contains a sensor. The *Sensor Map* tells the control panel which sensors to poll for values. Typically, this map will contain every sensor attached to the panel, starting with Sensor 1 and ending with the highest numbered sensor. However, during service or maintenance, it may be necessary to remove sensors. This can be done by deselecting any sensor from the map. Thus, it is feasible to have fewer sensors than the highest sensor number configured on the *Sensor Map*.

Relays

Every GDCP-Touch has four internal control relays with the option to add up to 32 total relays via GDCP-ExpansionPacks. The *Relay Map* tells the panel which relays to use for controlling equipment. Any relays that are not being used do not need to be configured. Each relay can be set individually with unique setpoints for CO and NO_2. Both on-delay and off-delay times can be set per relay as well to prevent undesired relay operation. The final relay configuration

option is relay level. This is used for multi-speed fan configurations where it is necessary to turn off lower level relays when higher level relays turn on. After configuring the relay settings, sensors are assigned to one or more relays to ascertain the gas values that will be used to trigger connected ventilation equipment.

Zones

Unlike sensors and relays, zones are not a physical object. Instead, zones are used to group relays together that control a particular area. This allows multiple fans, or multi-speed fans, to be controlled in sequence. The *Home Screen* of the control panel scrolls through all configured zones and displays the aggregated information, providing a quick and easy way to see the status of the entire system. Each zone also has its own alarm setpoint and on-delay that is used for the internal alarm.

Overrides

In addition to triggering relays via gas concentrations and setpoints, each relay can also be manually or automatically overridden. Manual override allows the user to activate or deactivate a relay either for an adjustable duration or until reset by the user. Automatic override allows the user to schedule days and times when the relays will activate or deactivate, regardless of the gas concentration.

Analog Output

Each GDCP-Touch and GDCP-ExpansionPack is equipped with one analog output that generates a 4-20 mA, 2-10 VDC, 1-5 VDC, or 0.2-1 VDC signal. This signal is proportional to the average concentration of target gas present in the assigned zone. It may be used for monitoring gas or for controlling a VFD. Not all systems will accept this signal directly and may need an intermediary controller.

Modbus Output

This control panel system uses Modbus RTU for communication. A third-party BMS or DDCS can be configured to communicate with the system. Available information includes gas concentration, sensor types, errors present, relay states, and more. There is no configuration required for this output at the control panel.

BACnet IP Output

The IP address, subnet mask, gateway address, and DHCP can all be configured under the *BACnet Settings* page to enable communication over BACnet IP. The information available from the control panel is the same as with Modbus.

Navigating the User Interface

Home Screen

The *Home Screen* is where the control panel will be most of the time. This page is the central hub for displaying all of the information available on the panel. While not interacting with the panel, the *Home Screen* will automatically scroll through each configured zone. Inside of each zone, the user will be able to see the number of configured relays, number of configured sensors, current gas levels, configured analog outputs, and active or scheduled overrides. If any relays are active as a result of a setpoint being exceeded, the gas responsible will change colors from green to yellow to indicate this to the user. If the alarm setpoint is exceeded, the gas responsible will change to red.

Persistent in the bottom left corner, the date and time will be shown. If an error or alarm condition is present, this will be replaced with a “Silence” button to mute the alarm. The “Settings” icon is in the bottom right corner. Tapping this icon at any time will prompt the user for the passcode to access the *Settings Menu*. The dots at the bottom indicate the current page number. Swiping left or right will allow the user to manually navigate to a particular zone. Tapping anywhere inside of a zone will open the corresponding *Zone Screen*.

Zone Screen

The *Zone Screen* gives more information about a zone. Here, the user can see each relay configured to that zone and each sensor configured to that relay. Sensor icons will display the current gas concentration value. As with the *Home Screen*, the zone concentration values will change colors depending on the setpoints. All of the zone alarm information is available under “Alarm Settings”. By pressing the left and right arrows at the edges of the display, the user can easily navigate between zones without needing to go back to the *Home Screen*. However, pressing the “Back” button in the upper left corner or the “Home” button in the upper right corner will return the panel to the *Home Screen*. Tapping on a relay will open the corresponding *Relay Screen*.

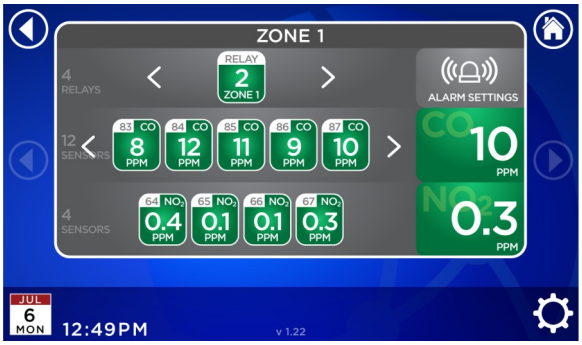

Relay Screen

The *Relay Screen* shows more information about an individual relay. This includes the zone to which the relay is assigned, the average gas concentration of all sensors assigned to the relay, the activation type, the setpoints, the override status, and the relay level. Tapping the arrows on either edge of the display will allow the user to see other relays without going back to the *Zone Screen*.

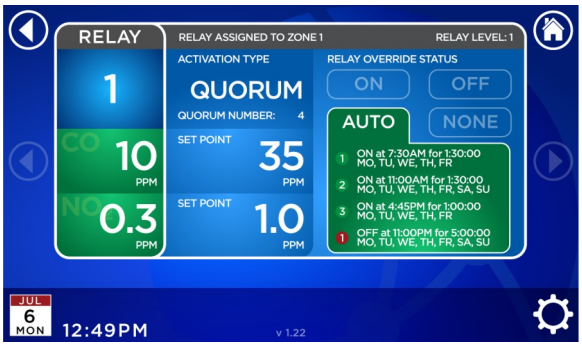

Passcode Entry Screen

Upon pressing the “Settings” icon, the user will be asked for a passcode. This passcode is assigned at the factory and included in the packaging with every order. Entering the passcode will allow the user to make changes to the system. After 5 minutes of inactivity, the panel will automatically return to the *Home Screen* and the passcode will need to be reentered. If the passcode is lost at any time, please contact the factory.

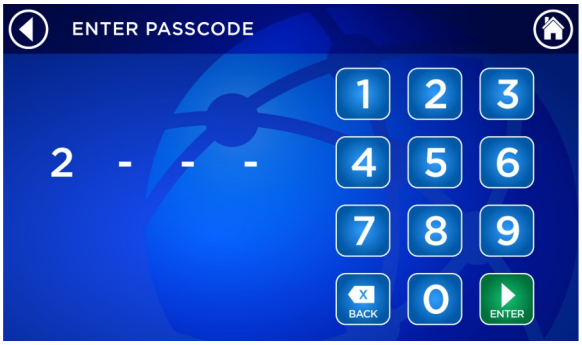

Settings Menu

The *Settings Menu* is where any changes to the control panel configuration will be made. Under settings, a user can assign or remove sensors, relays, zones, and analog outputs, configure the date and time, set up BACnet communication, or perform a system reset. The control panel will come from the factory with the customized configuration specified at the time of order so it should not be necessary to change settings during installation. For more detailed information about the settings, see page 31.

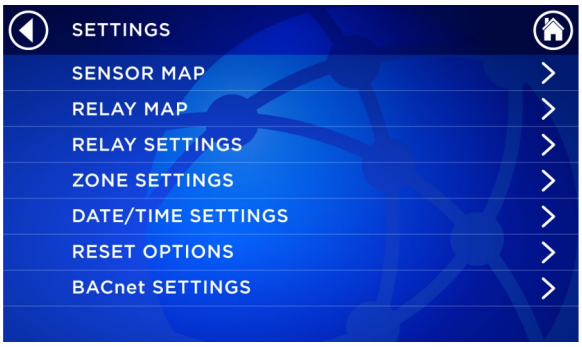

Factory Default Settings

Unless otherwise specified on the order form, the following settings will be used to configure the control panel.

Setting	**Default**
Sensors	All Sensors Configured
Relays	4 Relays
Relay 1 *(Low Alert)*	All Sensors
On-Delay	1 minute
Off-Delay	1 minute
Setpoint	35 PPM CO / 1.0 PPM NO_2
Activation Type	Single
Level	1
Relay 2 *(Medium Alert)*	All Sensors
On-Delay	0 minute
Off-Delay	1 minute
Setpoint	75 PPM CO / 3.0 PPM NO_2
Activation Type	Single
Level	1
Relay 3 *(High Alert)*	All Sensors
On-Delay	0 minute
Off-Delay	1 minute
Setpoint	100 PPM CO / 5.0 PPM NO_2
Activation Type	Single
Level	1
Relay 4 *(Alarm)*	All Sensors
On-Delay	15 minute
Off-Delay	0 minute
Setpoint	100 PPM CO / 5.0 PPM NO_2
Activation Type	Single
Level	1
Zone 1	All Relays

Alarm On-Delay	15 minute
Alarm Setpoint	100 PPM CO / 5.0 PPM NO_2
Alarm Activation Type	Single
Analog Output Signal	4-20 mA
Concentration Display Type	Average
Automatic Relay Override	Disabled
BACnet IP	DHCP
Date and Time	Current Date/US Central Time (CT)
Daylight Savings Time Correction	On

Each transmitter ordered will be assigned a number 1 through 128 as applicable, alternating between Carbon Monoxide and Nitrogen Dioxide. Transmitter numbering should not be changed without first consulting Brasch technical support.

Adjusting the Hardware Settings

Changing the Sensor Address

The sensor address is set by SW1 on the right side of each sensor board using a binary counting system. Digit 0 is at the top of the board and 1 is at the bottom. See figure 12 on page 55 for proper settings. Each sensor comes preset from the factory with the correct address assigned, so these switches should not be touched except for in very specific cases. Please consult with the factory before reassigning sensor addresses.

Changing the Relay Board Address

The relay board address is set by SW1 in the middle of each relay board using a binary counting system. Digit 0 is at the right of the board and 1 is at the left. See figure 18 on page 59 for proper settings. Each relay board comes preset from the factory with the correct address assigned, so these switches should not be touched except for in very specific cases. Please consult with the factory before reassigning relay board addresses.

Changing the Analog Output Scale

The scale of the analog output on each relay board is adjusted by moving the jumper on JP1 to the appropriate position. From top to bottom, the options are 2-10 VDC, 1-5 VDC, 0.2-1 VDC, and 4-20 mA. See figure 20 on page 60 for proper settings.

Adjusting the Software Settings

Adding/Removing Sensors

To configure the sensors, navigate to *Settings* > *Sensor Map*. Active sensors will appear in green while inactive sensors will appear in gray. Each sensor icon will also include the gas type and current value (if present). If a sensor is not communicating with the control panel, it will default to gas type “CO”. To set a sensor as active, simply tap the inactive sensor icon that corresponds to the correct sensor address. Multiple sensors can be set as active by pressing and holding the icon of the highest desired sensor number. To set a sensor as inactive, press and hold the sensor icon for 5 seconds. A prompt will appear to confirm or cancel the action. Any assignments previously made will be erased when inactivating a sensor. Sensors will need to be reassigned upon reactivation.

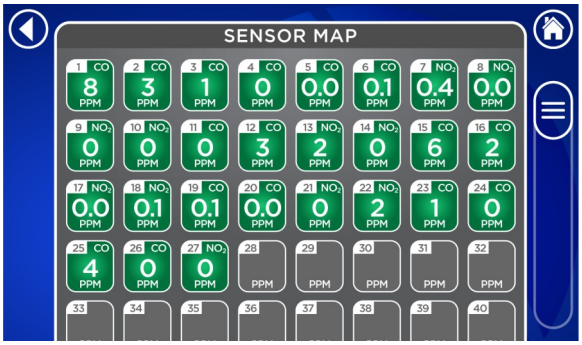

Adding/Removing Relays

To configure the relays, navigate to *Settings* > *Relay Map*. Active relays will appear in green while inactive relays will appear in gray. To set a relay as active, simply tap the inactive relay icon. To set a relay as inactive, press and hold the relay icon for 5 seconds. A prompt will appear to confirm or cancel the action. Any settings and assignments made to the relay will be erased. Active relays will indicate the zone to which they are assigned below the relay number.

Adding/Removing Zones

Only zones that are configured will appear on the Home Screen. To add a zone, go to *Settings* > *Zone Settings* and select “Add/Remove Zone”. Press “Add Zone” in the pop-up window. There must always be at least one zone present for the system to function. A maximum of 32 zones may be configured. To remove a zone, follow the above steps but press “Remove Zone” in the pop-up window. Any settings and assignments made to the zone will be erased.

Adjusting the Setpoints

Relay setpoints to select the gas concentration threshold are configured independently for each individual relay. To change the setpoints, navigate to *Settings* > *Relay Settings* > *Relay #*. Tap on either “CO Setpoint” or “NO_2 Setpoint” and use the arrows in the pop-up window to change the setpoint value. Pressing and holding the arrows will change the value more quickly in the respective direction.

Alarm setpoints are configured per zone. To change the alarm setpoints, navigate to *Settings* > *Zone Settings* > *Zone #*. Tap on “Alarm Settings” and use the arrows in the pop-up window to change the setpoint values. As with the relay setpoints, pressing and holding the arrows will enable making larger changes quicker.

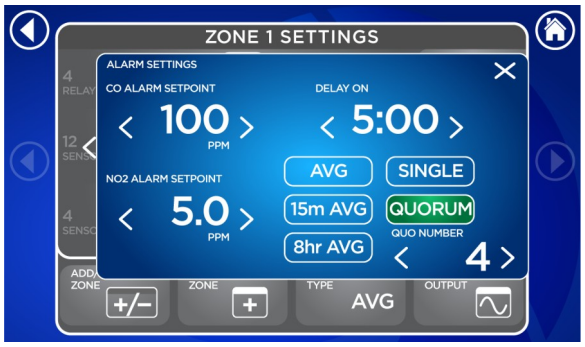

Adjusting the Delays

On-delays and off-delays can be set for each relay to adjust the duration before energizing/de-energizing the contacts. Navigate to *Settings* > *Relay Settings* > *Relay #*. Then tap “Setpoint Delay” and use the arrows to adjust the values. If no delay is desired, set the delay time to “0:00”. Delays are adjustable in one minute increments.

The zone alarm only features an on-delay. To change the delay time, navigate to *Settings* > *Zone Settings* > *Zone #* > *Alarm Settings*. The alarm will always turn off once the gas concentration falls below the setpoint.

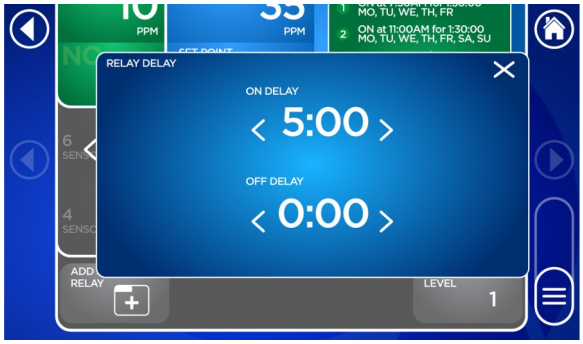

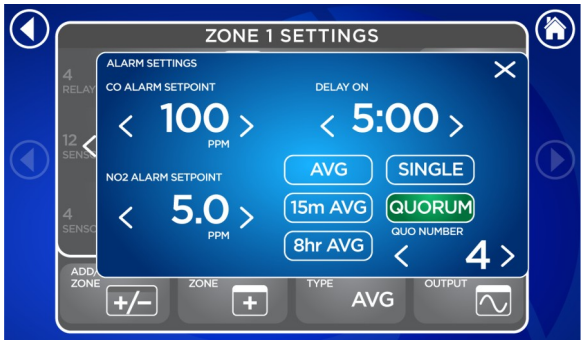

Adjusting the Activation Type

The Activation Type determines what combination of values will be used to determine if the setpoint has been exceeded. Use the below table to determine the appropriate type.

Activation Type	Criteria for Activation
Single	Only one sensor needs to exceed the setpoint.
Quorum	The number of sensors specified in the quorum must exceed the setpoint.
Avg	The average value of all assigned sensors must exceed the setpoint.
15m Avg	The time-weighted-average value of all assigned sensors from the previous 15 minutes must exceed the setpoint.
8hr Avg	The time-weighted-average value of all assigned sensors from the previous 8 hours must exceed the setpoint.

To adjust the activation type for a relay, go to *Settings* > *Relay Settings* > *Relay #* and select “Activation Type”. To adjust the activation type for a zone alarm, go to *Settings* > *Zone Settings* > *Zone #* and select “Alarm Settings”. Not all activation types will always be available.

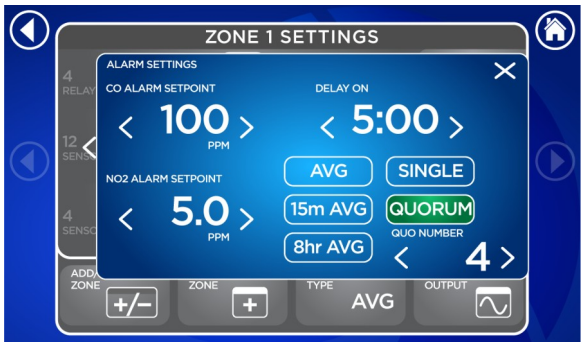

Adjusting the Zone Display Type

The zone display controls what gas concentration values are shown on the *Home Screen*. Navigate to *Settings* > *Zone Settings* > *Zone Display Type* to select either a time-weighted-average value or the 8-hour peak average value.

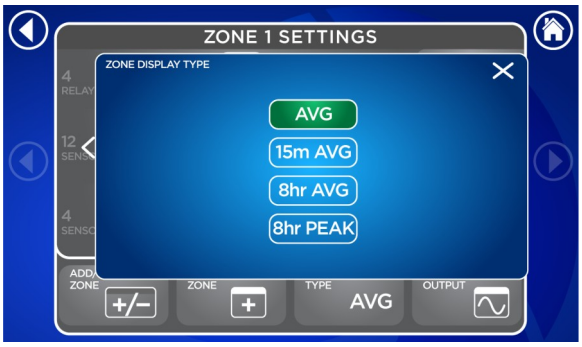

Assigning Sensors

In order for a relay to determine if its setpoint has been exceeded, at least one sensor must be assigned. To assign a sensor, go to *Settings* > *Relay Settings* > *Relay #* and select “Add/Remove Sensor”. This will bring up the *Sensor Map* to display all currently configured sensors. If a sensor icon is dark, that sensor can be added to a relay. If a gray sensor icon needs to be added, go back to *Settings* > *Sensor Map* and follow the instructions for “Adding/Removing Sensors”. A single sensor can be added to multiple relays. To remove a sensor assignment, select “Add/Remove Sensor” and tap on the icon. Removing the sensor

will only dissociate that sensor from the current relay. Any other assignments will remain in effect.

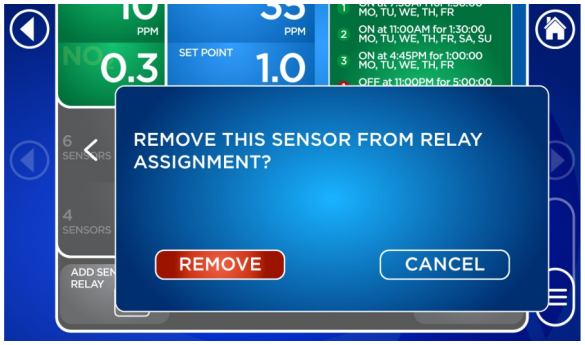

Assigning Relays

In order for a relay to display its information, it must be assigned to a zone. To assign a relay, go to *Settings* > *Zone Settings* > *Zone #*. Then tap “Add/Remove Relay”. This will bring up the *Relay Map* to display all currently configured relays. If a relay icon is dark, that relay can be added to a relay. If a gray relay icon needs to be added, go back to *Settings* > *Relay Map* and follow the instructions for “Adding/Removing Relays”. Each relay can be assigned to only one zone. To remove a relay assignment, select “Add/Remove Relay” and tap on the icon. Relays will retain sensor assignments and settings when assigned to another zone.

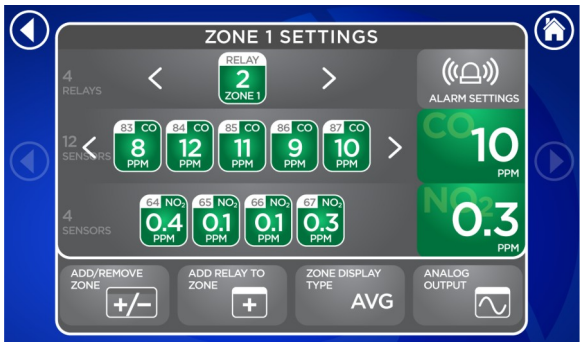

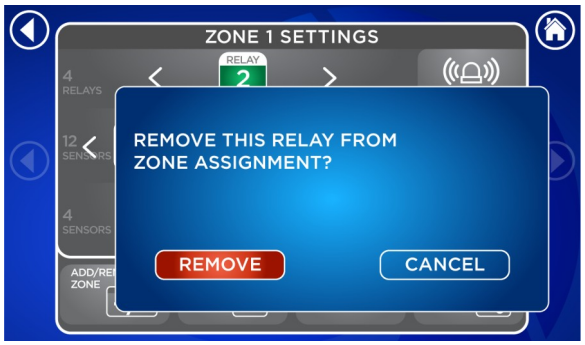

Assigning Analog Outputs

To select which zone provides the value to use for the analog output, navigate to *Settings* > *Zone Settings* > *Zone #*. Then select “Analog Output”. In the pop-up window, choose which of the available analog outputs to use. Each analog output can only be assigned to one zone. Each zone can be assigned multiple analog outputs. To remove an analog output assignment, go to *Settings* > *Zone Settings* > *Zone #* > *Analog Output* and select “None” from the pop-up window.

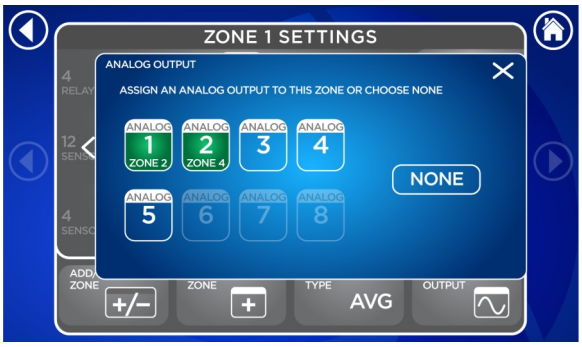

Changing Relay Levels

Relay levels are used to coordinate the operation of multiple relays on a single zone. Relays of the same level can remain engaged at the same time. Relays of a higher level will disengage relays of a lower level when engaging themselves. This configuration is primarily intended for multi-speed fans but it may also be used for operating multiple equipment types in stages. To change a relay level, go to *Settings* > *Relay Settings* > *Relay #*. Tap on “Relay Level” and select the desired level. On-screen instructions are provided to describe the principles of operation.

The silkscreen on each relay board is labeled with the actual electrical connection, not the intended state of the relay under normal operating conditions (see figure 14 on page 57). Normally closed contacts on Relay Level 1 will open during normal operating conditions and close once the setpoint and delay times are exceeded. They will also close during an error state to preserve the fail-safe condition. Normally closed contacts on Relay Levels 2-4 operate in reverse, closing during normal operating conditions and opening once the setpoint and delay times are exceeded. For this reason, it is necessary to pay attention to the physical wiring connections and make sure they are adjusted appropriately when changing the relay level.

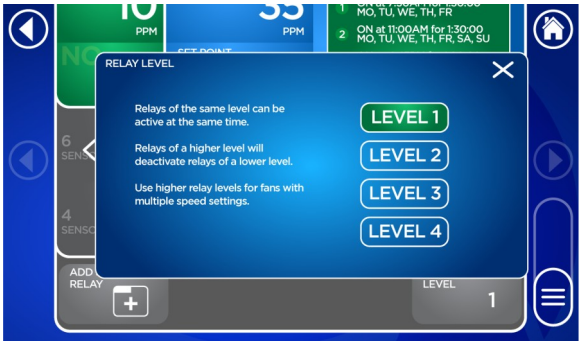

Setting Manual Overrides

Each relay can be manually overridden to force it either on or off. To access these options, navigate to *Settings* > *Relay Settings* > *Relay #*. Under “Relay Override Status”, selecting “On” will open a pop-up window to force the relay into its active state – as if its setpoint was exceeded. Use the arrows to adjust the duration for which the override should last, or select “Manual” to keep the override active indefinitely. Selecting “Off” will open the same pop-up window to force the relay into its inactive state – as if no gas was detected. Selecting “None” will return the relay to its normal operating state. Any scheduled automatic overrides or gas related activity will take effect at this time. If neither condition is present, the off-delay timer will begin. Note that manual overrides take precedence over normal operation and automatic overrides.

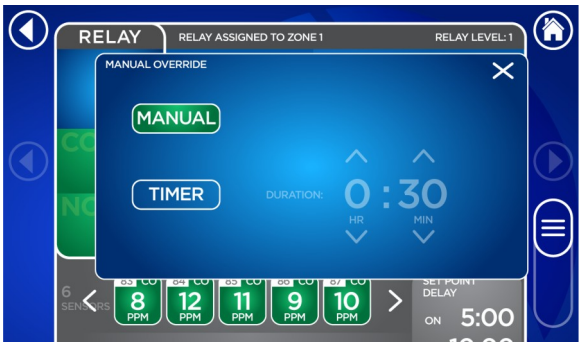

Setting Automatic Overrides

Each relay can schedule up to four separate times for an automatic override. Of these times, three may be used to force the relay into an active state while one may be used to force it into an inactive state. Navigate to *Settings* > *Relay Settings* > *Relay #* and select “Auto” to open the pop-up window. Use the arrows to select the time when the scheduled override should begin and the duration the override should last. Tap the buttons at the bottom to schedule the days the override should take place. Once a time, duration, and day have been set, the automatic override is scheduled. To disable the automatic override, either select “None” under “Relay Override Status”, or remove all days from the automatic override window.

Changing the Date and Time

To change the date or time, go to *Settings* > *Date/Time Settings*. Then use the arrows to select the correct date and time. Pressing and holding the arrows for 5 seconds will enable quick scrolling to make large changes easier. The buttons underneath the time will set the panel to display in either 12 hour or 24 hour format. The button in the lower left corner will enable daylight savings time compensation if green. Press “Save” before exiting to save any changes made.

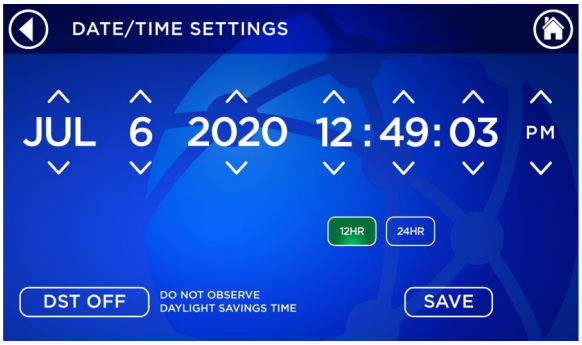

Configuring BACnet

If using BACnet, the panel will need to be configured properly to establish communication with a BMS. Navigate to *Settings* > *BACnet Settings*. Selecting “Manual” will enable editing of the IP address, subnet mask, and gateway address using the arrows in a pop-up window. Pressing and holding the arrows for 5 seconds will enable quick scroll to make larger changes easier. Selecting “DHCP” will use Dynamic Host Configuration Protocol to automatically assign network parameters. Changing the “Device ID” will allow multiple GDCP-Touch units to be used on a single network. Follow the instructions provided with the BACnet client device for connecting a server device. Read the Brasch BACnet PICS for more information about the GDCP-Touch capabilities.

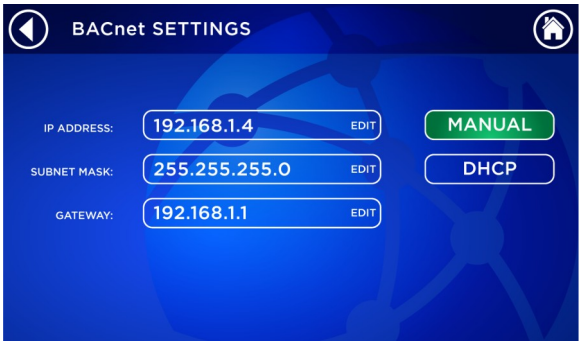

Performing a Reset

Should too many changes be made that cause the panel to operate in an undesirable manner, Two options are available to reset the GDCP-Touch under *Settings* > *Reset Options*. “Reset to Default” will erase any custom sensor, relay, or zone settings while leaving all assignments intact. “Factory Reset” will completely erase the configured system and return the panel to basic factory settings. Only perform a factory reset after consulting with Brasch Technical Support.

Using the Analog Outputs

This control panel is supplied with an analog output for each relay board that can be connected to a building management controller or variable-frequency drive. These outputs can produce either a current or voltage signal that is proportional to the average concentration of the target gas present at each sensor on a zone. By moving jumpers, located on the relay board, the user can select from 4-20 mA, 2-10 VDC, 1-5 VDC, and 0.2-1 VDC signals. This signal is available at the terminal strip TS9, located at the top right corner of the relay board. See figure 20 on page 60 for the signal mode selection jumpers.

The output signal is connected using a two-conductor shielded cable. The resistance of the total cable length must be less than 250 Ω if the 4-20 mA current loop mode is selected. For the voltage modes, the input impedance of the controller must be greater than 100 kΩ.

Ground the shield of the signal cable at the controller earth grounding point only to avoid noise conditions created by ground loops. Although the positive signal lead can be shorted to ground without causing damage, this condition should be avoided. Also, do not route the signal cable in conduit containing other wiring to avoid unwanted noise pickup.

The analog outputs produce a signal based on the full scale response of the sensors. See the graphs in figure 21 on page 60 of this manual.

As an example, a Brasch Carbon Monoxide Transmitter has a full scale output of 200 PPM CO. For the 4-20 mA output mode with a single sensor configured, 0 PPM CO would equal 4 mA while 200 PPM CO would equal 20 mA. Follow the instructions supplied with your controller to adjust the controller's input for the proper scaling of the signal.

Obtaining the Best Operation

Carbon Monoxide and/or Nitrogen Dioxide Transmitters

This panel is designed to control the ventilation system in response to a rising concentration of the target gas at its transmitters. No two installations will be exactly the same. Different ventilation components, the number of gas producing sources, air flow patterns inside the room, the total room volume, and the exact location of the transmitters influence how effective the system is in controlling the target gas concentration. The ideal operation occurs at the settings that remove the most target gas without unnecessarily operating the ventilation system.

The panel has two variables that can be adjusted to obtain the best performance under the conditions it is operating – setpoint concentration and delay time. Both of these are fully adjustable for each relay. The setpoint concentration sets a threshold of the desired maximum concentration while the delay assures that transient levels of gas do not cause the fans to operate for unnecessarily short periods of time. This delay for any target gas is adjustable from 0 to 599 minutes in increments of 1 minute. The on-delay period occurs between the time the setpoint level is exceeded and the relay is engaged; the off-delay period occurs between the time the target gas concentration drops below the setpoint level and the relay is disengaged.

The default settings (see page 29) provide a good starting point and will be acceptable for most installations. If the target gas concentration appears to continue rising after the fans activate, fine tune the settings by reducing the setpoints or the on-delays. If the fans operate too often and/or for short periods, increase the on/off-delays.

In some cases, you may find that a target gas source is too close to a transmitter. Consider other mounting locations for the transmitter, or move the gas source farther away.

Maintenance

Testing the Response to the Target Gas

Carbon Monoxide and/or Nitrogen Dioxide Transmitters

Testing these transmitters requires that the target gas be applied to the sensor using one of two methods. Gas can be applied from a tank of air containing a known concentration of the target gas or from the exhaust of an operating engine to produce a level of target gas sufficient to elicit a response from the control panel. For the latter method, use a gasoline or petrol engine to produce CO and a diesel engine to produce NO_2.

Of the two methods of obtaining test gas, the simplest is operating an engine in the vicinity of the transmitter under test. The engine should be placed about 10 feet away from the transmitter so that exhaust gases will not contact the transmitter directly.

CAUTION

Allowing the transmitter to come in direct contact with undiluted exhaust gases will decrease the expected useful lifetime of the sensor. The high concentration of acids and other components in the exhaust gas will overload the activated carbon filter inside the sensor and will increase the effects of interfering gases on the accuracy of the sensor.

If the sensor becomes damaged, it must be replaced with a new sensor calibrated at the factory.

The engine should be allowed to operate until a level of the target gas is displayed on the panel that is sufficient to activate the ventilation system. Depending on the setpoint and delay settings, and the volume of the area where the transmitter is located, this may take from 10 to 30 minutes.

Using test gas applied from a tank has the advantage of speed as well as assurance that the transmitter is responding accurately to the target gas. However, the gas must be applied directly to the sensor if the response is to be close to the value present in the tank. The test gas can not be allowed to become diluted by the air in the room before it comes in contact with the sensor. This reduces the concentration to a level too low to give the desired result.

While test gas is readily available for CO, gas containing low PPM levels of NO_2 is not as easy to find. Check with your local environmental or chemical supply store for more information.

To test the sensor response using test gas from a tank, loosen the two retaining screws and open the lid. Then apply gas to the sensor. The concentration on the control panel display should reach 90% of the expected reading within 30 seconds. Allow approximately 5 minutes to ensure 100% response. If the response time is too slow or the concentration displayed is outside of acceptable tolerance, the sensor should be recalibrated.

Alternatively, seal the vents and let the gas flow through a flexible hose into the transmitter housing. Allow 10 to 15 minutes for the test gas to completely replace the air inside the transmitter housing. If the test gas has the required concentration, the control panel should respond by displaying a concentration and activating the appropriate ventilation component(s).

Because of the uncontrolled conditions in the test area, the panel may not indicate a concentration equal to that of the test gas. However, sufficient response can be obtained to determine that the transmitter is working.

Brasch Environmental Technologies recommends testing the transmitters once every six months to ensure proper response and accuracy.

Replacing the Sensor

The sensor's useful lifetime depends greatly upon its operating conditions. Continuous operation around large or numerous gas sources may shorten the sensor's useful life. A recommended recalibration date is recorded on the front panel label of each transmitter.

Because each sensor requires individual calibration, the sensor is replaced by installing a new, factory-calibrated sensor board assembly. This procedure can be accomplished in the field. The old sensor board assembly may be discarded.

To replace a sensor board assembly, disconnect any power sources from the sensor board. Remove the two retaining screws and open the cover. Unplug any connections to the sensor board and remove the four screws securing the sensor board to the housing. Place the old sensor board aside. After making sure that all jumpers and switches on the new sensor board match the old sensor board, place the new sensor board into the housing. Replace the four screws to secure the sensor board to the housing and return and connections to their original locations. Carefully close the cover and firmly tighten the two cover retaining screws. Restore the sensor power sources and check for proper operation.

Suggested Repair Parts

This control panel contains few field serviceable parts. However, the battery and fuses are replaceable in the field. While an open fuse may indicate problems with the circuitry, fuses may also open because of power surges or ventilation component failure. Termination resistors may also be necessary to prevent signal reflections on the communication line. Brasch recommends that the following parts be available for replacement.

Qty	Description	Location	Part Number
1	Lithium Battery, CR1220, 3 V	RTC Battery	CR1220
4	Fuse, TR5, time-lag, 5.0 A, 250 VAC	Relay Fuses	TR5-5.0
1	Fuse, TR5, time-lag, 1.0 A, 250 VAC	Relay Board Main Fuse	TR5-1.0
1	Fuse, TR5, time-lag, 0.250 A, 250 VAC	Sensor Board Negative Fuse	TR5-0.250
1	Fuse, TR5, time-lag, 1.0 A, 250 VAC	Sensor Board Positive Fuse	TR5-1.0
2	Resistor, 120 Ω, ½ W, ±5%	End-of-Line Resistors	RES-120

Troubleshooting

Error Messages

The GDCP-Touch is programmed to display error messages to indicate a problem condition with the unit. The bottom center of the *Home Screen* will scroll through each message present. When an error occurs, the alarm will chirp and a silence button will replace the calendar icon to allow a user to mute the alarm. Any associated Level 1 relays (if able) will activate during an error state.

Relay # – Manual Override Active

While not technically an error, the manual override prevents the panel from operating normally. This message will appear whenever any relay is being forced on or off by a manual override. Setting the manual override to “None” will clear the error message.

Sensor # Communication Loss

This error message means that the panel is unable to communicate with the indicated sensor and attempts to reestablish communication have failed. Once the panel is able to communicate with the sensor again, the error message will clear.

The most common reason for this error message is improper wiring. Another reason is that the transmitter is addressed incorrectly, either matching the designation of another transmitter or being set to an inactive address.

Sensor # – Calibration Expired

Each sensor has an internal timer that indicates to the control panel when the recommended recalibration date occurs. This timer is approximately 2 years from the previous calibration. When this error message appears, test the sensor to verify its response. If the response is still acceptable, the error message may be cleared with the “Clear” button; it will return in 6 months. Otherwise, recalibrate the sensor or replace the sensor board to clear the error.

Sensor # End of Life – Please Replace

When a sensor reaches the expected end of its useful lifetime, this error message will be shown. This will be approximately 10 years from the original manufacturing date for both Carbon Monoxide and Nitrogen Dioxide sensors. The signal is triggered by a clock in the sensor board. In the event that the unit loses power, a supercapacitor will maintain the clock for up to three weeks.

When this error message appears, replace the sensor board.

Sensor # Sensor Missing

If no gas sensor is present on the sensor board, this error message will appear on the display.

Verify that there is a sensor on the sensor board and that it is fully seated in its socket. If not, place the sensor firmly into the socket. If the issue persists, the sensor detection switch may need to be replaced.

Sensor # Calibration Invalid

When a sensor board does not have zero and span values saved in memory, this error will be shown. This is often due to damaged or corrupted memory.

Replace the sensor board to correct the error.

Relay Board # Communication Loss

This error message means that the panel is unable to communicate with the indicated relay board and attempts to reestablish communication have failed. Once the panel is able to communicate with the relay board again, the error message will clear. As the relay board is without a control signal during this error state, all relays on the board will default to their normal position.

The most common reason for this error message is improper wiring. Another reason is that the relay board is addressed incorrectly, either matching the designation of another relay board or being set to an inactive address.

SD Card Error – Insert SD Card

If there is no microSD card present in the control panel, this message will appear. The panel will not be able to record data without a microSD card.

Inserting a microSD card will clear the message. If the error message does not clear, try a different microSD card. If the error message still does not clear, replace the SBC on the back of the display.

SD Card Error – Replace SD Card

The control panel will display this error message if it is not able to write data to the microSD card. This could be the result of a corrupted block of memory on the card or too many write operations being performed over the lifespan of the card.

Replace the microSD card to clear the error.

Checking and Replacing the Battery

The real-time clock circuitry is powered by a single CR1220 lithium-ion battery. This circuit is responsible for maintaining the date and time settings while the GDCP-Touch does not have power. If the date and time settings reset after a power cycle, the CR1220 battery may need to be replaced.

With power to the control panel off, pry the battery from the holder in the back of the display board. Use a voltmeter to measure across the top and bottom of the battery. If the voltage is not reading near 3 V, the battery is considered “dead” and needs to be replaced. Use only CR1220 batteries.

Checking and Replacing Fuses

All of the circuit boards are protected by time-lag TR5 fuses. They are UL rated at 250 VAC, and manufactured by Littelfuse, series 374.

There are 5 fuses on the relay board. The main fuse is located in FH1 and protects the entire board. This fuse has a rating of 1.0 Amps.

Each pair of control relay contacts are protected by a TR5 time-lag fuse rated at 5.0 Amps. These fuses are located in FH2 through FH5, and can be found along the bottom edge of the relay board next to terminal strips TS3 through TS6.

Test these fuses by switching power off and removing them from their holders. Measure for a low value of resistance across the pins. Replace any fuse that does not have a resistance reading near 0 Ω. Always replace fuses with one having the same ratings and characteristics.

Two more TR5 time-lag fuses protect the input circuitry of the sensor board. The fuse located at FH1 is rated at 1.0 Amp while the fuse located at FH2 is rated at 0.250 Amps. Test each fuse for resistance and replace if the reading is not near 0 Ω.

Common Installation/Operation Mistakes

Ventilation Components Connected to the Wrong Relays

A common mistake is to connect the ventilation equipment to the wrong relay contacts. All contacts are labeled as either “NO” or “NC” to designate their powered-off state. If connected to the wrong terminal, equipment that is supposed to turn on when the setpoint is reached will instead turn off. Similarly, equipment connected to the wrong numbered relay could activate at undesirable setpoints and delays.

Relay Levels Set Incorrectly

Relay Level 1 is the most common level that will be used in most circumstances. However, multi-speed fan setups often require the use of distinct relay levels. Equipment wired to the “NC” terminal will activate once the setpoint has been exceeded or an error state has been entered. Relay Levels 2-4 use the “NO” terminal to achieve this feat. Equipment wired to “NC” at these relay levels will always be active during normal operation. Furthermore, higher relay levels will disable lower relay levels when active. If ventilation components are running when they should not be, or not running when they should be, check the relay levels and the wiring connections at the terminal blocks.

Improper Communication Wiring

Improper communication wiring, or exceeding the number of nodes on a single bus, can cause communication between the panel and transmitters to be inconsistent. The GDCP-Touch uses Modbus RTU over RS-485 for communication. All standard guidelines apply for this type of wiring. Ensure that a shielded, twisted pair cable is being used and that the cable is free from interference. A straight daisy chain should be implemented and a 120 Ω termination resistor must be included at the farthest transmitter in the chain. If too many sensors are connected on one bus line (e.g., 32 sensors connected to the control panel without any expansion packs), communication between devices may be erratic. Be sure to include GDCP-ExpansionPacks where necessary to repeat the original signal and create a new bus for more sensors. Also, verify that the incoming communication enters the relay board at the isolated terminal block as shown in figure 16 on page 58.

Setpoint Level Set at Wrong Concentration

A setpoint that is too low can cause frequent cycling of the ventilation system, leading to excessive wear on components and increased cost of operation. Adjust the setpoint concentration to that which produces the most efficient ventilation system operation while

protecting people in the monitored area. Setting the concentration too high can create a situation in which the target gas concentration becomes dangerous, or the area contains too much smoke from engine exhaust. Again, adjust the setting to a level that produces the best overall operation. Be sure to check all applicable federal, state, and local guidelines as these may dictate the required concentration.

Delay Period Set Incorrectly

Using a long delay period can produce a situation in which a rapidly increasing gas level may rise to dangerous concentrations before the ventilation system activates. Also, smoke from the engine exhaust could build up to a point where people in the area begin to experience irritation in their eyes and nose. Choose delay settings that activate the fans and begin to clear the area before the gas rises to a dangerous concentration, or eye and nose irritation happens.

Setting the on-delay period too short will cause frequent operation of the ventilation system. The panel may activate the fans after sensing a transient gas concentration. Once the fans activate, this transient level will drop quickly causing the panel to turn off the fans. In this case, the ventilation system operates frequently and wastes energy. Increasing the on-delay setting will prevent fans from turning on as often while increasing the off-delay will ensure that even small amounts of transient gas are removed.

Setting the Proportional Output Incorrectly

If a controller connected to the proportional output is expecting a certain output signal, the jumpers on JP1 of the relay board must be configured to output that type of signal. A common mistake is leaving JP1 set to 4-20 mA while configuring another device to look for a voltage input. This causes the output to read a constant 0 V.

Bias/Termination Switches in the Wrong Position

There are two sets of switches on each relay board – SW3 and SW4 – that include bias resistors and termination resistors. The bias resistors are intended to be used to stabilize communication at the start of a new bus. At the control panel, switch positions 2 and 3 are always on. For expansion packs, switch positions 2 and 3 are on at SW4 and off at SW3. If these switches are in the wrong position, communication may be impaired. The termination resistors are intended to eliminate noise on a bus by creating a loop between the beginning and end of the line. Switch position 1 should be on at both SW3 and SW4 when using relay boards as repeaters. If a relay board is not the beginning or end of a bus line, the termination resistors should be in the off position.

Relay Activation Type Set Incorrectly

The relay activation type is a key factor in determining when a relay activates. If this activation type is set incorrectly, a relay may activate too soon or not at all. Refer to page 33 for details on setting the correct activation type.

Panel Not Grounded

The touchscreen requires a ground connection to properly distinguish touch inputs on the display. There is a grounding terminal on the top of the line filter to easily connect the panel to ground. When the panel is not grounded, the user may experience an unresponsive display that does not react to inputs, or an extremely sensitive display that reacts to non-inputs. Brasch strongly recommends that the control panel be grounded according to applicable wiring codes. However, if this is not possible, using a stylus or otherwise ensuring that the touch input is at the same potential as the floating ground will improve touch accuracy and responsiveness.

Transmitter Mounted in an Unsatisfactory Location

For reliable operation, the transmitters must be mounted in the proper locations. Please read “Mounting the Transmitters” on page 14 for guidelines on choosing locations.

Common mistakes include mounting a transmitter too close to a garage door. When the door is open, rain may blow through the doorway and onto the transmitter housing. Another common mistake is to mount the transmitter in a location where it comes in direct contact with engine exhaust. The large amount of contaminates in engine exhaust can shorten the useful life of the sensor.

One more common mistake is to choose a mounting location that places the transmitter too near the outlet of air conditioners or heaters. Quick, drastic changes in ambient temperature can cause erratic shifts in the sensor readings.

By following the mounting guidelines, many of the problems caused by improper mounting locations can be eliminated.

Limited Warranty

Warranty Statement

Brasch Environmental Technologies, LLC warrants gas transmitters, gas detectors, control panels, and accessories for a period of two years from the date of shipment against defects in material or workmanship. Should any evidence of defects in material or workmanship occur during the warranty period, Brasch Environmental Technologies will repair or replace the affected product, at its own discretion, without charge. The company shall not be held responsible for any charges incurred with removal or replacement of allegedly defective equipment, nor for incidental or consequential damages. If any equipment has not been installed per Brasch instructions, this warranty is void. The cost to repair, replace, or service any component is not the responsibility of Brasch. Any replacement parts or service necessary must be paid in full prior to shipment or performance.

Service and Repair Procedures

Our goal at Brasch Environmental Technologies is to produce products that constantly exceed the requirements and expectations of our customers. One of the ways of meeting that goal is to produce products that never fail or require service. However, when we are notified of a problem with one of our products, it is our intention to address the problem as quickly and efficiently as possible.

Many problems that appear at first to be associated with the product can be solved without returning the product. If you experience a problem and would like to discuss it with a factory service technician, you may call the number listed on the product label. You will be transferred to a technician specially trained to service that product. This technician will help you determine the most efficient way of solving the problem.

If service or repair of your Brasch product becomes necessary, an authorization request for returning the product to the Brasch factory must be obtained from our sales office. If you are an end user, please contact your Brasch distributor to initiate this request. The distributor, after obtaining a description of the problem, will contact the factory and request a Return Goods Tag (RGT) number. This number must be placed in a conspicuous location on the outside of the shipping package. Without this RGT number, Brasch will not accept the shipment. A brief description of the reason for returning the product should be included in the package. Without this description, repair may take longer than necessary.

You may, at the time you request service, request an estimate on the time it will take for repair. The Brasch representative will give you an estimate based upon the information you provide. Although Brasch Environmental Technologies, LLC will repair and return your product in as short a time as possible, Brasch cannot be held responsible for meeting repair estimates.

Appendix

Models and Descriptions

Transmitter Model and Description

Each Brasch Gas Transmitter is given a model that describes the type(s) of target gas(es). This model appears on the front panel label.

Use the following list to completely identify a transmitter once you know the model.

Voltage	Transmitter		
	CO	**NO_2**	**CO/NO_2**
24 VAC	GDCP-CM-Remote	GDCP-ND-Remote	GDCP-NCM-Remote

Accessory Model Number and Description

In addition to the universal accessories offered by Brasch, the GDCP-Touch has two unique accessories specifically designed to augment and enhance its capabilities.

Voltage	Model	Description
120 VAC	GDCP-PowerPack	External 120 VAC to 24 VAC step-down transformer to power the GDCP-Touch, GDCP-ExpansionPack, and up to 30 remote sensors.
24 VAC	GDCP-ExpansionPack	Expansion pack for GDCP-Touch. Adds 4 relays, 1 analog output, and up to 4 zones for greater control of HVAC equipment. Repeats signals to extend the communication range between sensors for an extra 4,000 ft.

Figures and Diagrams

Figure 7: Home Screen Layout – Normal

Figure 8: Home Screen Layout – Alarm

Figure 9: Transmitter Front Cover Layout

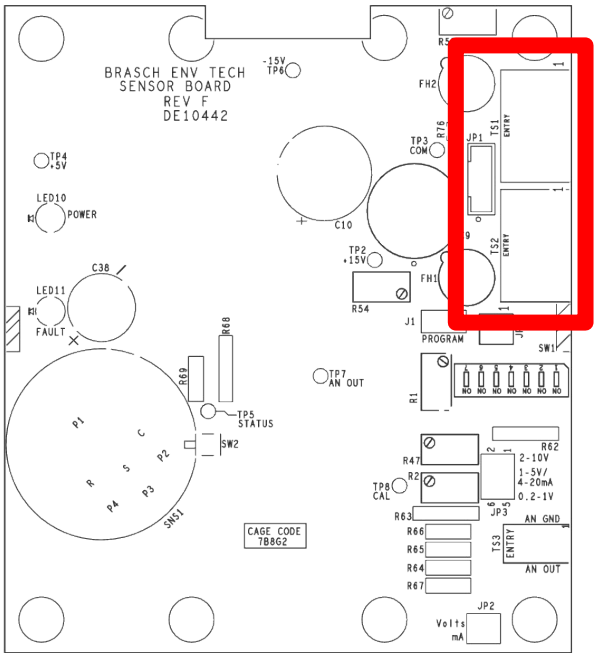

Black		+UNREG
White		COM
Black		-UNREG
Blue		-COMM
Brown		+COMM

Figure 10: Transmitter Wiring Connections

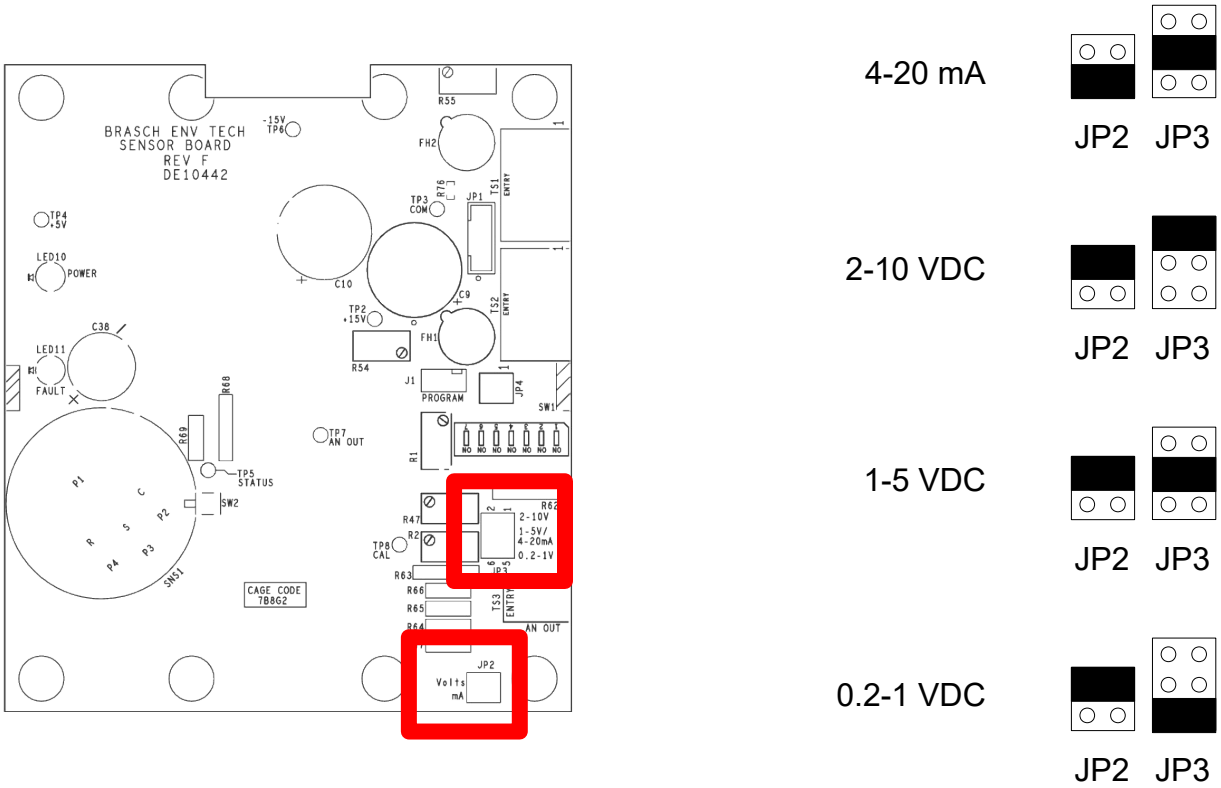

Figure 11: Transmitter Proportional Output Settings

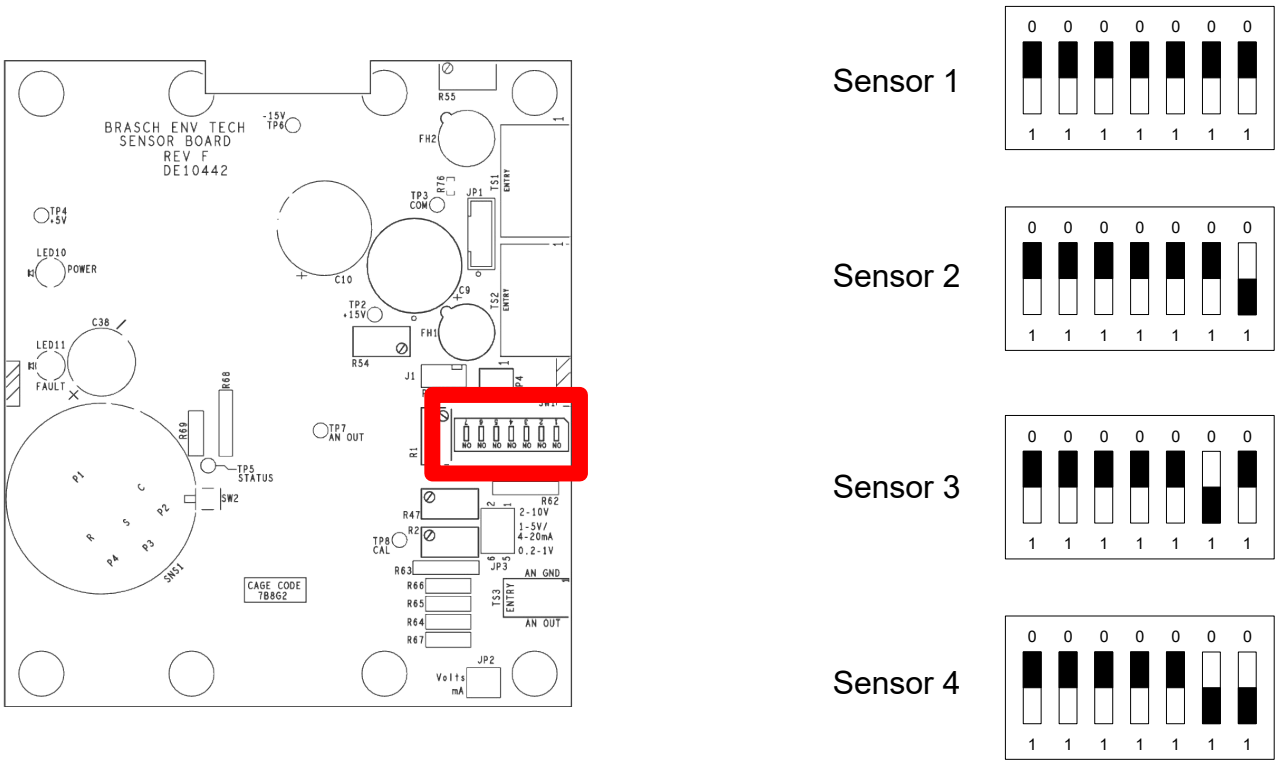

Figure 12: Sensor Address Assignment

Sensor Address	Switch Position	Sensor Address	Switch Position	Sensor Address	Switch Position	Sensor Address	Switch Position
1	0000000	33	0100000	65	1000000	97	1100000
2	0000001	34	0100001	66	1000001	98	1100001
3	0000010	35	0100010	67	1000010	99	1100010
4	0000011	36	0100011	68	1000011	100	1100011
5	0000100	37	0100100	69	1000100	101	1100100
6	0000101	38	0100101	70	1000101	102	1100101
7	0000110	39	0100110	71	1000110	103	1100110
8	0000111	40	0100111	72	1000111	104	1100111
9	0001000	41	0101000	73	1001000	105	1101000
10	0001001	42	0101001	74	1001001	106	1101001
11	0001010	43	0101010	75	1001010	107	1101010
12	0001011	44	0101011	76	1001011	108	1101011
13	0001100	45	0101100	77	1001100	109	1101100
14	0001101	46	0101101	78	1001101	110	1101101
15	0001110	47	0101110	79	1001110	111	1101110
16	0001111	48	0101111	80	1001111	112	1101111
17	0010000	49	0110000	81	1010000	113	1110000
18	0010001	50	0110001	82	1010001	114	1110001
19	0010010	51	0110010	83	1010010	115	1110010
20	0010011	52	0110011	84	1010011	116	1110011
21	0010100	53	0110100	85	1010100	117	1110100
22	0010101	54	0110101	86	1010101	118	1110101
23	0010110	55	0110110	87	1010110	119	1110110
24	0010111	56	0110111	88	1010111	120	1110111
25	0011000	57	0111000	89	1011000	121	1111000
26	0011001	58	0111001	90	1011001	122	1111001
27	0011010	59	0111010	91	1011010	123	1111010
28	0011011	60	0111011	92	1011011	124	1111011
29	0011100	61	0111100	93	1011100	125	1111100
30	0011101	62	0111101	94	1011101	126	1111101
31	0011110	63	0111110	95	1011110	127	1111110
32	0011111	64	0111111	96	1011111	128	1111111

Figure 13: Sensor Addresses and Switch Position

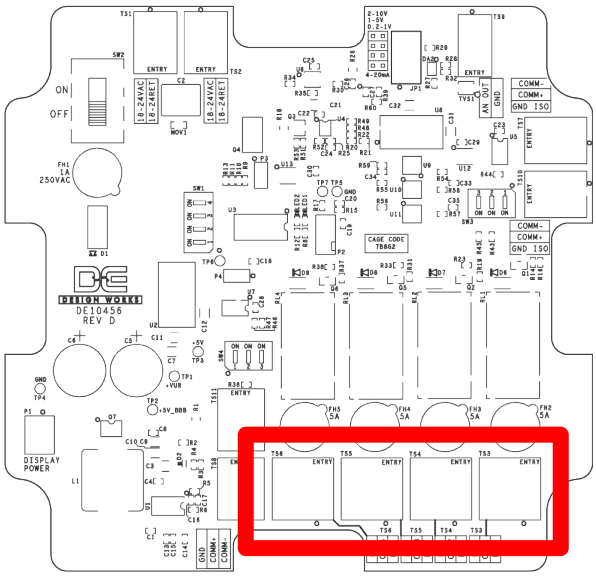

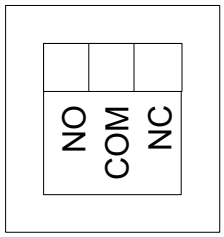

Relay Wiring (TS3-TS6)

Figure 14: Relay Contact Connections

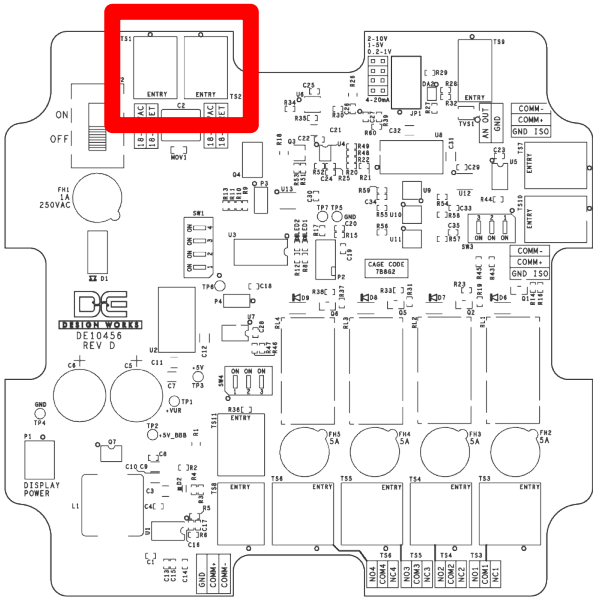

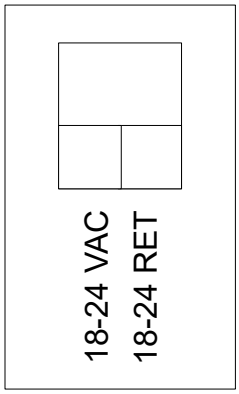

AC Input Wiring (TS1 & TS2)

Figure 15: Input Power Connections

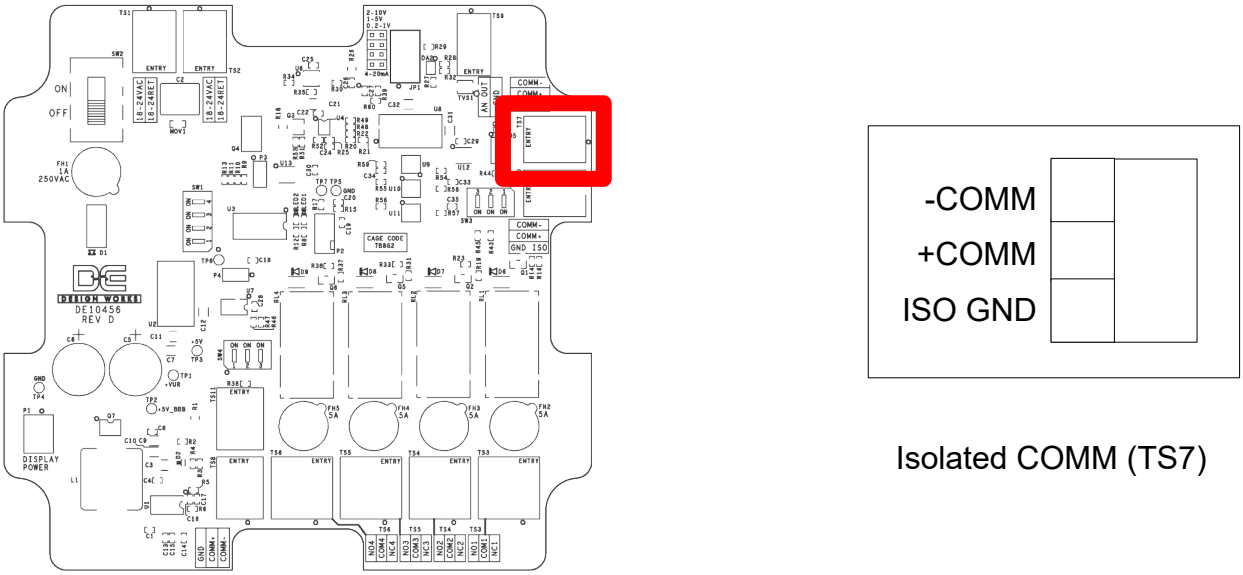

Figure 16: Transmitter Connection – Input

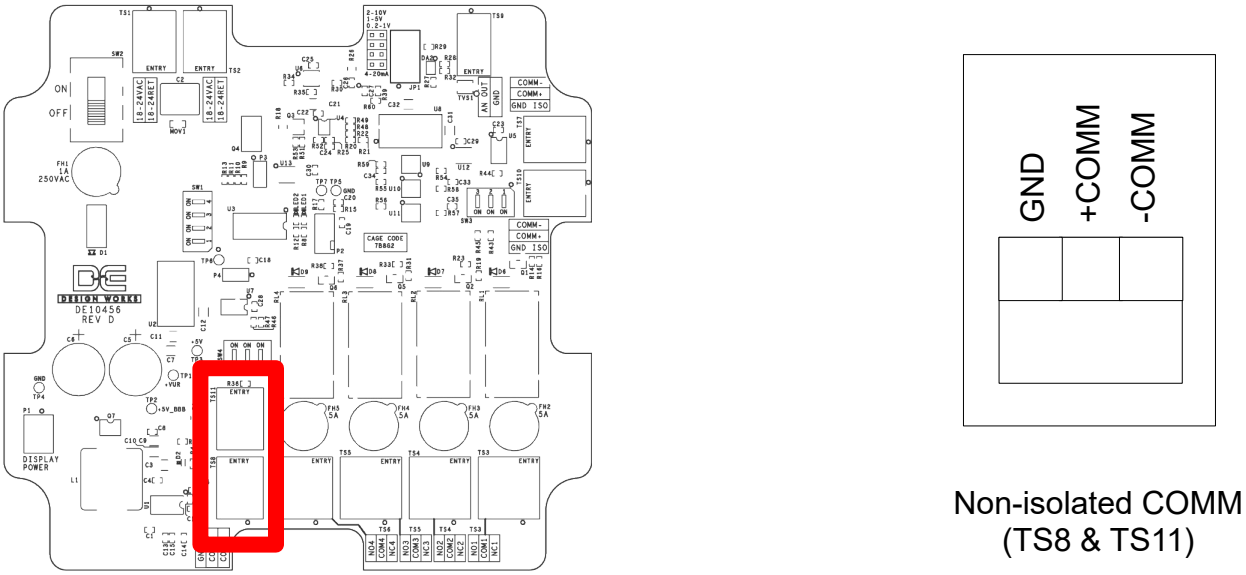

Figure 17: Transmitter Connection – Output

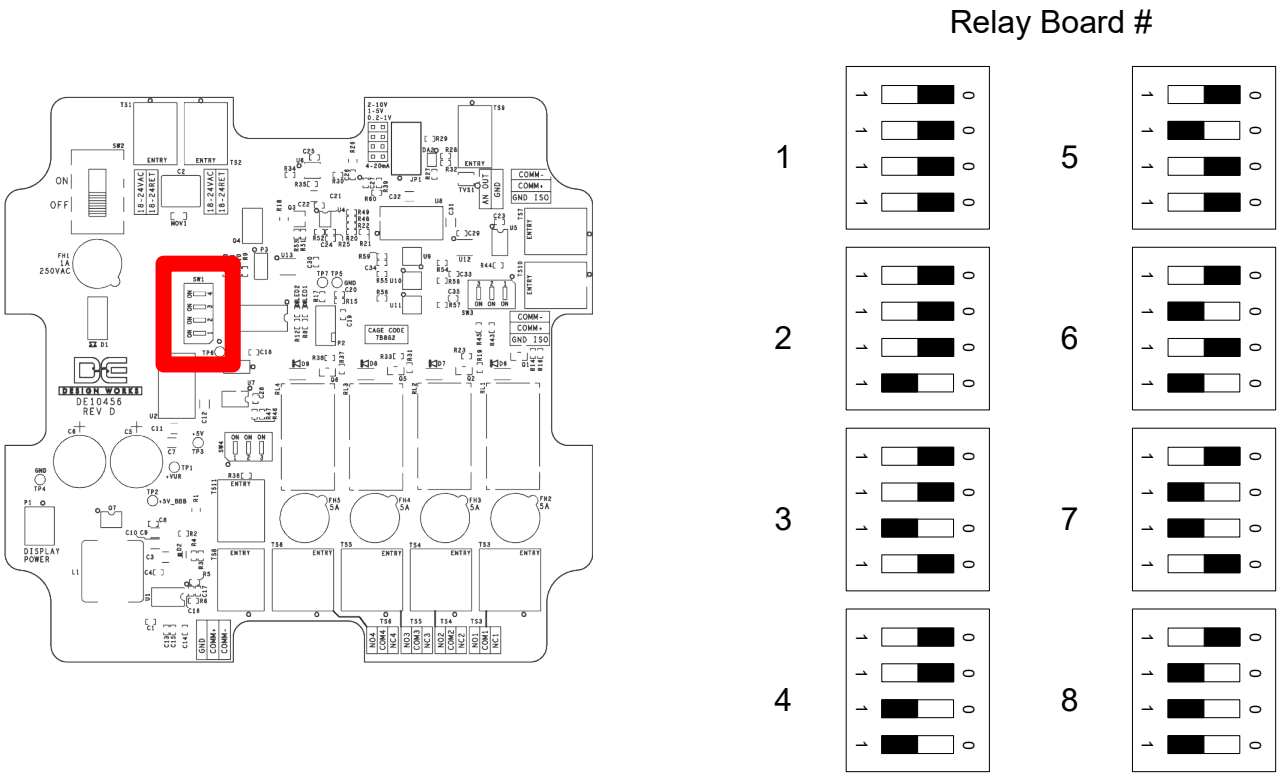

Figure 18: Relay Board Address Assignment

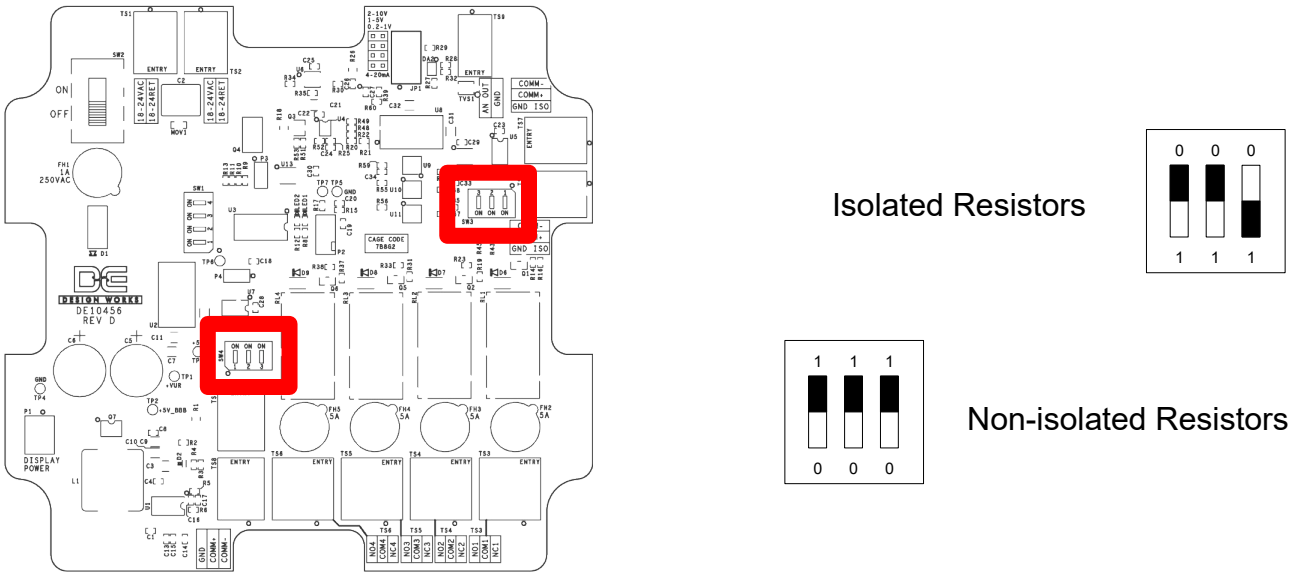

Figure 19: Relay Board Bias/Termination Resistors

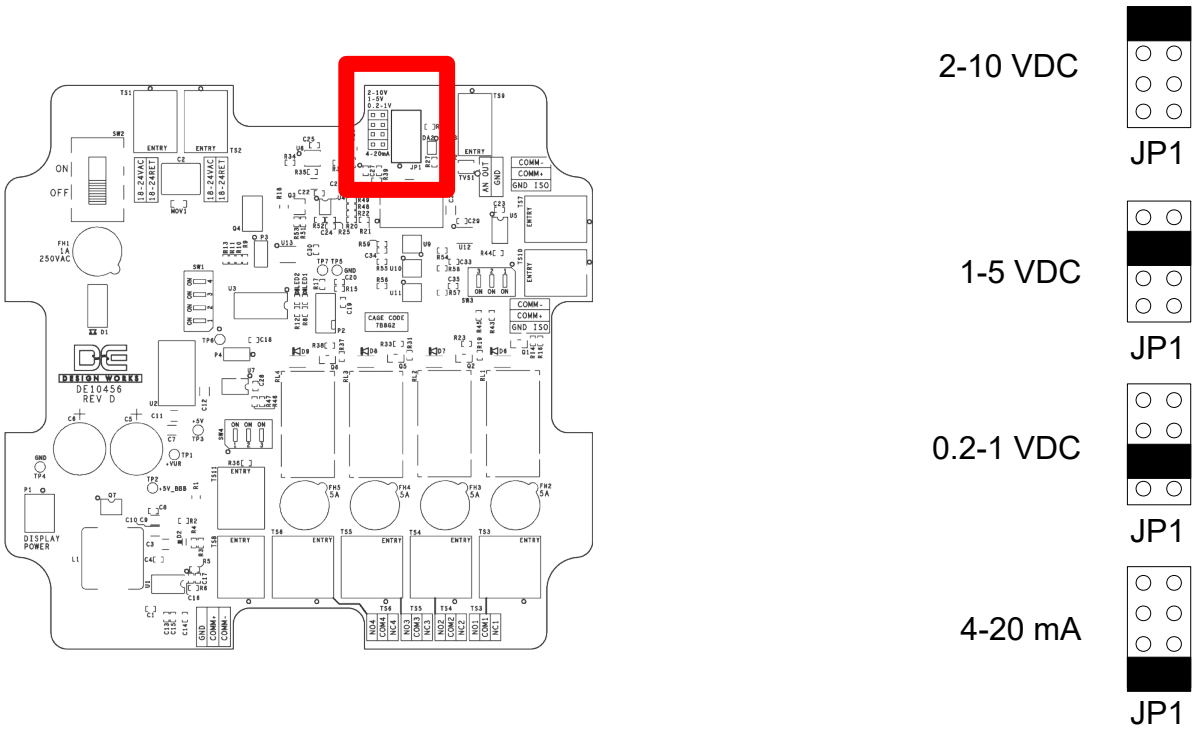

Figure 20: Analog Output Settings

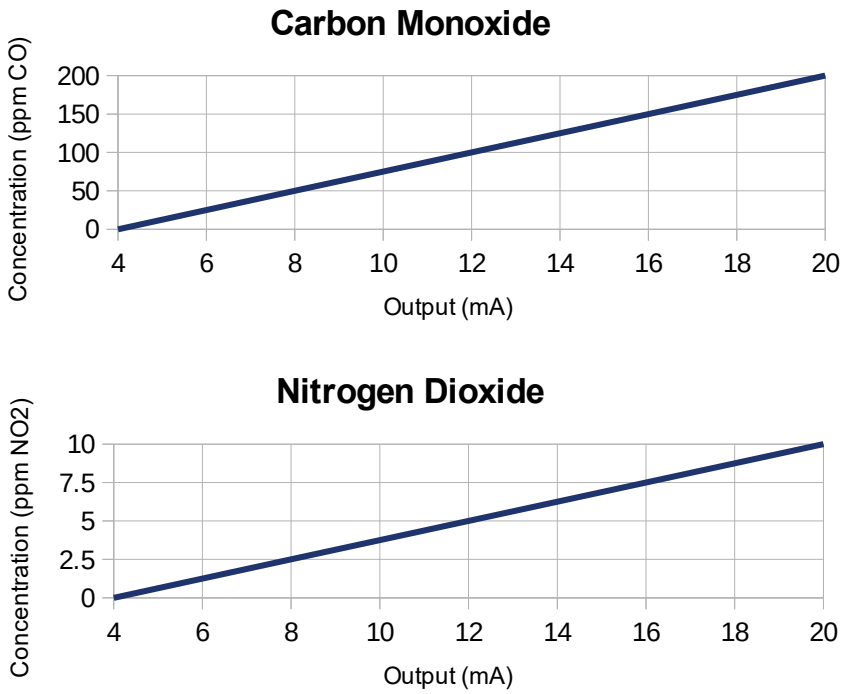

Figure 21: Analog Output Graphs (4-20 mA)

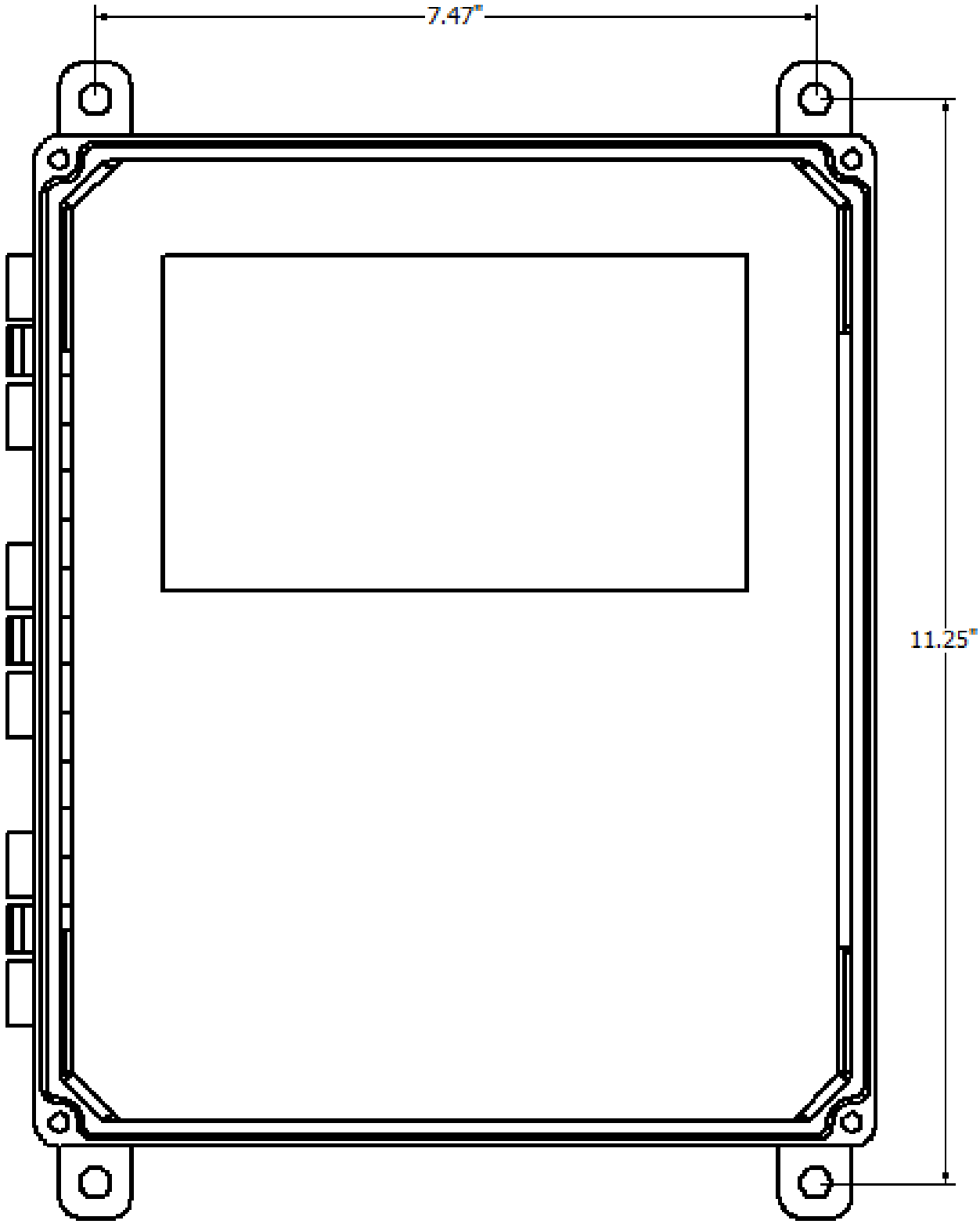

Figure 22: Mounting Dimensions (Not to Scale)

Filter Capacity	ppm-hours	H_2S	250,000
Filter Capacity	ppm-hours	NO_2	120,000
Filter Capacity	ppm-hours	NO	120,000
Filter Capacity	ppm-hours	SO_2	160,000
Sensitivity	% measured @ 20 ppm	H_2S	< 0.1
Sensitivity	% measured @ 10 ppm	NO_2	< 0.1
Sensitivity	% measured @ 10 ppm	Cl_2	< 0.1
Sensitivity	% measured @ 50 ppm	NO	< 25
Sensitivity	% measured @ 20 ppm	SO_2	< 0.1
Sensitivity	% measured @ 400 ppm	H_2	< 65
Sensitivity	% measured @ 400 ppm	C_2H_4	< 65
Sensitivity	% measured @ 20 ppm	NH_3	< 0.1

Figure 25: Cross-Sensitivity Characteristics – Carbon Monoxide

Sensitivity	% measured @ 20 ppm	H_2S	< -100
Sensitivity	% measured @ 50 ppm	NO	< 0.5
Sensitivity	% measured @ 10 ppm	Cl_2	< 100
Sensitivity	% measured @ 20 ppm	SO_2	< -2
Sensitivity	% measured @ 400 ppm	CO	< 0.1
Sensitivity	% measured @ 400 ppm	H_2	< 0.1
Sensitivity	% measured @ 400 ppm	C_2H_4	< 0.1
Sensitivity	% measured @ 20 ppm	NH_3	< 0.1
Sensitivity	% measured @ 5% (Vol)	CO_2	0

Figure 26: Cross-Sensitivity Characteristics – Nitrogen Dioxide

Note

The above figures are not complete lists of all possible desensitizing or contaminating gases or substances. Take caution to evaluate the probable effect of a contaminant not included in the above list. Contact Brasch Environmental Technologies technical support to learn more.

Free Installation and Startup Training

Brasch offers a complimentary online installation and startup training session for your new GDCP-Touch control panel system. It is free and covers everything you need to know to get the system running.

Sessions are every Tuesday at 10 AM CT and Thursday at 2 PM CT. Scan the QR code or visit the link to book your training.

https://t.ly/wzYC

BRASCH
ENVIRONMENTAL TECHNOLOGIES

140 Long Road, Suite 101
Chesterfield, Missouri 63005

General Contact Information

Phone: 314-291-0440
Fax: 314-291-0646
Email: customerservice@braschenvtech.com
Website: www.braschenvtech.com

Technical Support Contact Information

Phone: 314-291-0440 ext. 1006
Fax: 314-291-0646
Email: customerservice@braschenvtech.com
Website: www.braschenvtech.com/support-for-existing-systems

Revision: 1.8
Issue Date: June 2, 2023
Document Number: IOM03